VOL. 62 PAGE 561

FILED FOR RECORD
IN MY OFFICE

AT 2:40 O'CLOCK P M.

JUN 5 2008

MICKEY DORMAN
COUNTY CLERK, PANOLA COUNTY, TEXAS
BY LaVonna White DEPUTY

MEETING OF COMMISSIONERS' COURT OF PANOLA COUNTY

TO WHOM IT MAY CONCERN:

PURSUANT TO THE TEXAS OPEN MEETINGS ACT, NOTICE IS HEREBY GIVEN THAT A REGULAR MEETING OF THE COMMISSIONERS' COURT OF PANOLA COUNTY, TEXAS WILL BE HELD ON THE 9TH DAY OF JUNE, 2008, IN THE COMMISSIONERS' COURTROOM IN THE PANOLA COUNTY COURTHOUSE IN CARTHAGE, TEXAS AT 9:00 O'CLOCK A.M. AT WHICH MEETING THE FOLLOWING SUBJECTS WILL BE DISCUSSED AND THE FOLLOWING MATTERS ACTED UPON:

OPEN MEETING:

1. **CITIZEN COMMENTS**: This is for citizens to comment on any subject not on the current agenda concerning county business. Members of the Court may answer direct questions, but any action from this item must be scheduled on a future agenda.

2. **COMMISSIONERS' REPORT**: These are for informational purposes only. Any action that needs to be taken on the basis of these reports will be placed on a future agenda for action.

3. **COUNTY JUDGE'S REPORT**: This is for informational purposes only. Any action that needs to be taken on the basis of this report will be placed on a future agenda for action.

4. **CONSENT ITEMS**:

PERSONNEL

a. None.

ROAD & BRIDGE

a. To approve and record a request by MarkWest Energy East Texas Gas Company, L.L.C. to cross under Panola County Road #445 with an 8" steel pipe line.

b. To authorize the County Auditor to advertise for sealed bids for the purchase of one (1) tractor with loader for use by the Panola County Road and Bridge

Department, Precinct #2. Bid specifications available at the Panola County Warehouse, 1120 E. Sabine, Carthage, Texas and the Panola County Judge's Office, 110 S. Sycamore, Room 216-A, Carthage, Texas. Bids to be opened at a Regular Session of the Commissioners' Court on July 14, 2008 at 9:00 o'clock a.m.

MISCELLANEOUS

a. To approve minutes of Commissioners' Court meetings held during the month of May, 2008.

b. To record County Judges & Commissioners Association of Texas Certificates of Completion for Panola County Commissioners Ronnie LaGrone, Douglas Cotton, Hermon Reed, and Dale LaGrone.

c. To record Election Services Contract Fund Budget Amendment #1 for 2008.

d. To record Panola County Criminal District Attorney State Forfeiture Fund Budget Amendment #2 for Fiscal Year 2008.

e. To record the Panola County Emergency Services District No. 1 Annual Financial Report for the Year Ended December 31, 2007.

f. To approve and record 2008 Budget Amendment No. 6.

g. To accept and record Analysis of the GASB Liability Related to Post-Retiree Health Benefits for Panola County as of December 31, 2007.

REQUESTS FOR CONFERENCE ATTENDANCE

a. To approve and record a Request for Attendance at a Conference form(s) for the following Panola County elected official(s)/employee(s): Panola County Sheriff's Department Sergeant Sherry Jones; Panola County Sheriff's Department Senior Detention Deputy Albert Garza; Panola County Sheriff's Department Communications Officer Melissa Poindexter; Panola County Extension Agent-FCS Sarah Colley Jones; and Assistant Panola County Indigent Health Care Coordinator Sheley Blackerby.

5. To approve Road & Bridge requisitions and to approve payment of current Panola County bills as presented on vouchers prepared and submitted by the County Auditor.

6. To open sealed bids for the purchase of one (1) 3/4 Ton Truck for the Panola County Road and Bridge Department. Bids may be awarded at a future meeting of the Court.

7. To declare the real property located at 306 Hudson Street in Carthage, Texas as surplus property.

8. To discuss and act upon approving a Purchase Agreement between Panola County and Tyler Technologies for the purchase of three (3) computers for the Panola County Juvenile Probation Office.

9. To discuss and act upon approving a revision to the Panola County Employee Handbook.

ADJOURNMENT

WITNESS THE HAND OF THE UNDERSIGNED CLERK ON THIS THE 5TH DAY OF JUNE, 2008 AT 2:40 O'CLOCK P.M.

Mickey Dorman
MICKEY DORMAN, COUNTY CLERK
PANOLA COUNTY, TEXAS
By: LaVona White, Deputy

I, MICKEY DORMAN, CLERK OF THE COMMISSIONERS' COURT OF PANOLA COUNTY, TEXAS DO HEREBY CERTIFY THAT THE ABOVE NOTICE WAS POSTED ON THE OFFICIAL BULLETIN BOARD IN THE PANOLA COUNTY COURTHOUSE IN THE CITY OF CARTHAGE, TEXAS AND IN A PUBLIC PLACE VISIBLE AT ALL TIMES ON THE 5TH DAY OF JUNE, 2008 AT 2:40 O'CLOCK P.M.

Mickey Dorman
MICKEY DORMAN, COUNTY CLERK
PANOLA COUNTY, TEXAS
By: LaVona White, Deputy

FILED FOR RECORD
IN MY OFFICE
AT 1:00 O'CLOCK P M
JUL 14 2008
MICKEY DORMAN
COUNTY CLERK, PANOLA COUNTY, TEXAS
BY Mickey Dorman DEPUTY

The State of Texas
The County of Panola County

On this the 9th day of June, A. D. 2008, the Commissioners' Court of Panola County. Texas met in a Regular Meeting of the Court at 9:00 o'clock a.m. in the Commissioners' Courtroom of said County with the following members of the Court present:

David L. Anderson	County Judge
Ronnie LaGrone	Commissioner, Precinct #1
Hermon E. Reed, Jr.	Commissioner, Precinct #3
Dale LaGrone	Commissioner, Precinct #4

and Commissioner Douglas M. Cotton of Precinct #2 absent, constituting a quorum of the Court. Also attending were Mickey Dorman, County Clerk, and Lee Ann Jones, Administrative Assistant to the County Judge. Attached to and made a part of these minutes is a list of other attendees and the office or organization that each represents. The following proceedings were held at this meeting:

OPEN MEETING:

1. CITIZEN COMMENTS:

There were no comments from the citizens in attendance.

2. COMMISSIONERS' REPORTS:

Commissioner Ronnie LaGrone reported that the work at the airport for termite damage repair and restroom repair had been completed.

Commissioner Reed reported that he had attended a Regional Water Board meeting where water problems in the East Texas area had been discussed.

3. COUNTY JUDGE'S REPORT:

Judge Anderson gave no report.

4. CONSENT ITEMS:

PERSONNEL

a. None.

ROAD & BRIDGE

a. To approve and record a request by MarkWest Energy East Texas Gas Company, L.L.C. to cross under Panola County Road #445 with an 8" steel pipe line.

b. To authorize the County Auditor to advertise for sealed bids for the purchase of one (1) tractor with loader for use by the Panola County Road and Bridge Department, Precinct #2. The bid specifications are available at the Panola County Warehouse, 1120 E. Sabine, Carthage, Texas and the Panola County Judge's Office, 110 S. Sycamore, Room 216-A, Carthage, Texas. The bids are to be opened at a Regular Session of the Commissioners' Court on July 14, 2008.

MISCELLANEOUS

a. To approve minutes of Commissioners' Court meetings held during the month of May, 2008.

b. To record County Judges and Commissioners Association of Texas Certificates of Completion for Panola County Commissioners Ronnie LaGrone, Douglas Cotton, Hermon Reed, and Dale LaGrone.

c. To record Election Services Contract Fund Budget Amendment #1 for 2008.

d. To record Panola County Criminal District Attorney State Forfeiture Fund Budget Amendment #2 for Fiscal Year 2008.

e. To record the Panola County Emergency Services District No. 1 Annual Financial Report for the Year Ended December 31, 2008.

f. To approve and record 2008 Budget Amendment No. 6.

g. To accept and record Analysis of the GASB Liability Related to Post-Retiree Health Benefits for Panola County as of December 31, 2008.

REQUESTS FOR CONFERENCE ATTENDANCE

a. To approve and record a Request for Attendance at a Conference form(s) for the following Panola County elected official(s)/employee(s): Panola County Sheriff's Department Sergeant Sherry Jones; Panola County Sheriff's Department Senior Detention Deputy Albert Garza; Panola County Sheriff's Department Communications Officer Melissa Poindexter; Panola County Extension-FCS Sarah Colley Jones; and Assistant Panola County Indigent Health Care Coordinator Sheley Blackerby.

Commissioner Ronnie LaGrone moved and Commissioner Dale LaGrone seconded the motion to approve all the Consent Items. The motion passed by a vote of 4-0 with Commissioner Cotton absent.

A COPY OF EACH AMENDMENT REQUEST AND/OR BOND IS ATTACHED TO AND MADE A PART OF THE MINUTES.

5. Commissioner Dale LaGrone moved and Commissioner Reed seconded the motion to approve the Road and Bridge requisitions and to approve the payment of the current Panola County bills as presented on vouchers prepared by the County Auditor's Office. The motion passed by a vote of 4-0 with Commissioner Cotton absent. SEE LIST OF BILLS ATTACHED.

6. A bid from Randall Dodge was opened for the purchase of a ¾ ton pickup truck for use by the Panola County Road and Bridge Department. Action was postponed on the bid to the last item of the meeting to allow Road Coordinator John DePresca to clarify the bid.

7. Commissioner Ronnie LaGrone moved and Commissioner Dale LaGrone seconded the motion to declare the real property located at 306 Hudson Street in Carthage, Texas as surplus property. The motion passed by a vote of 4-0 with Commissioner Cotton absent. SEE ATTACHED.

8. After some discussion Commissioner Ronnie LaGrone moved and Commissioner Reed seconded the motion to approve a Purchase Agreement between Panola County and Tyler Technologies for the purchase of three (3) computers for the Panola County

Juvenile Probation Office. The motion passed by a vote of 4-0 with Commissioner Cotton absent. SEE COPY OF AGREEMENT ATTACHED.

9. After some discussion Commissioner Ronnie LaGrone moved and Commissioner Reed seconded the motion to approve a revision to the Panola County Employee Handbook. The motion passed by a vote of 4-0 with Commissioner Cotton absent. SEE COPY OF REVISION ATTACHED.

The meeting was recessed at 9:10 o'clock a.m. for ten minutes to allow more time for the clarification of the truck bid on item 6.

RECESS

The meeting was reconvened at 9:21 o'clock a.m. with all members of the Court present except Commissioner Douglas Cotton.

Since Road Coordinator DePresca had been unable to reach the correct employee of Randall Dodge, Commissioner Ronnie LaGrone moved and Commissioner Reed seconded the motion to accept the bid of Randall Dodge in the amount of $33,444.00 with the understanding that the truck will only be accepted if the invoice for delivery is in agreement with that bid price. The motion passed by a vote of 4-0 with Commissioner Cotton absent. SEE BID ATTACHED.

The meeting was then adjourned.

Dated this the 9th day of June, 2008.

David L. Anderson, County Judge, Panola County, Texas

ATTEST:

Mickey Dorman, County Clerk, Panola County, Texas

9 June 2008 9:00 am

Jack Ree
Lynn McMullen
Becky Barbee
Allan Cann

CONSENT

ITEMS

INA Field Services, Inc.
325 W Sabine, Suite G
Carthage, Texas 75633
Phone (903) 694-2326
Fax (903) 694-2280
E-Mail carthage@inafieldservices.com

TRANSMITTAL

To: Kathy Brown, Panola County Commissioner's Office

From: Cathy Hesterley

Date: May 23, 2008

Re: MarkWest Energy East Texas Gas Company, L. L.C.. – 8" Pipeline (Petroquest Powell to Page Lateral) - Panola County Road Crossing: CR 445

Dear Mrs. Brown:

Enclosed please find two (2) copies a NOTICE OF PROPOSED INSTALLATION PIPE AND / OR UTILITY LINES with a survey plat and a section of a Panola County Road Map of each showing the approximate location of an 8-inch pipeline crossings of County Road 445 by MarkWest Energy East Texas Gas Company, L. L.C.. for your review.

Upon review and granting of permission by the Panola County Commissioner's Court, please forward the approved permit to the following address:

MarkWest Energy East Texas Gas Company, L. L.C..
c/o INA Field Services, Inc.
325 W. Sabine St., Suite G
Carthage, Texas 75633
903-694-2326

Sincerely,

Cathy Hesterley
Right-of-Way Agent for MarkWest Energy East Texas Gas Company, L. L.C..

cc: Mr. Jack Dunnavant

NOTICE OF PROPOSED INSTALLATION
PIPE AND / OR UTILITY LINES

DATE May 23, 2008

TO: THE PANOLA COUNTY COMMISSIONERS COURT

c/o

PANOLA COUNTY ROAD & BRIDGE DEPARTMENT CARTHAGE, TEXAS

Formal notice is hereby given that:

MarkWest Energy East Texas Gas Company L.L.C. proposes to place a
(COMPANY NAME)

8" Steel Pipe (Petroquest Powell to Page Lateral)) line within the
Right-of-Way of (PIPE SIZE)

County Road: 445 as follows:
(NUMBER OF ROAD)

The proposed pipeline will cross under the indicated roads on the attached sheet. Installation shall be made by boring approx. 47 feet, total length of line in Panola County, Texas.

The location and description of the proposed line and appurtenances is more fully shown by the drawings attached to this notice. The line will be constructed and maintained on the County Right-of-Way as directed by the County Commissioners in accordance with current Panola, County Specifications.

Construction of this line will begin on or after the:

15th day of June, 2008.

FIRM: MarkWest Energy East Texas Gas Company, LLC.

BY: Jack Dunnavant

TITLE: Construction Superintendent

ADDRESS: 607 SW Loop 436

Carthage, Texas75633

PHONE: 903-694-2225

APPROVAL

June 9, 2008

TO: Mr. Jack Dunnavant
MarkWest Energy East Texas Gas Company, L.L.C.
c/o INA Field Services, Inc.
325 W. Sabine, Suite G
Carthage, Texas 75633

RE: **CR #445**

The Panola County Commissioners' Court offers no objection to the location on the right-of-way of your proposed **8" steel pipe** line as shown by accompanying drawings and notice except as noted below.

It is expressly understood that the County Commissioners' Court does not purpose hereby, to grant any right, claim, title or easement in or upon this county road. It is further understood that in the future should for any reason the county need to work, improve, relocate, widen, increase, add to, or in any manner change the structure of this right-of-way, any required relocation of said lines shall be at the sole expense of owner.

All work on the county right-of-way shall be performed in accordance with the county instructions. The installations shall not damage any part of the road and adequate provisions must be made to cause minimum inconvenience to traffic and adjacent owners. Special specifications for placing this line are as follows:

1. All lines are to be installed a minimum of 36 inches below the flow line of the adjacent drainage or barrow ditch.

2. All excavation within the right-of-way and not under surfacing shall be backfilled by tamping in 6 inch horizontal layers. All surplus material shall be removed from the right-of-way and the excavation finished flush with surrounding natural ground.

3. Lines crossing under surfaced roads and under surfacing cross roads within the right-of-way shall be placed by boring. Boring shall extend from crown line to crown line. Gravity from sewer lines under roadways shall be cast iron pipe.

4. All lines, where practicable, shall be located to cross roadbed at approximately right angles thereto. No lines are to be installed under or within 50 feet of either end of any bridge. No lines shall be placed in any culvert or within 10 feet of the closest point of same.

5. Parallel line will be installed as near the right-of-way lines as is possible and no parallel line will be installed in the roadbed or between the drainage ditch and the roadbed without special permission of the Panola County Commissioners' Court.

6. Operations along roadbeds shall be performed in such manner that all excavated material be kept off the pavement at all times, as well as all operating equipment and materials. No equipment or installation procedures will be used which will damage any road surface or structures. The cost of any repairs to road surface, roadbed, structures or other right-of-way features as a direct result of this installation will be borne by the owner of this line.

7. Barricades, warning signs, lights, and flag man(men) when necessary shall be provided by the contractor or owner. One-half (1/2) of the traveled portion of the road must be open at all times.

Approved: David L. Anderson
COUNTY JUDGE

COMMISSIONERS:

Precinct #1 Ronnie LaGrone
Precinct #2 Doug Cotton
Precinct #3 Hermon E. Reed, Jr.
Precinct #4 Dale LaGrone

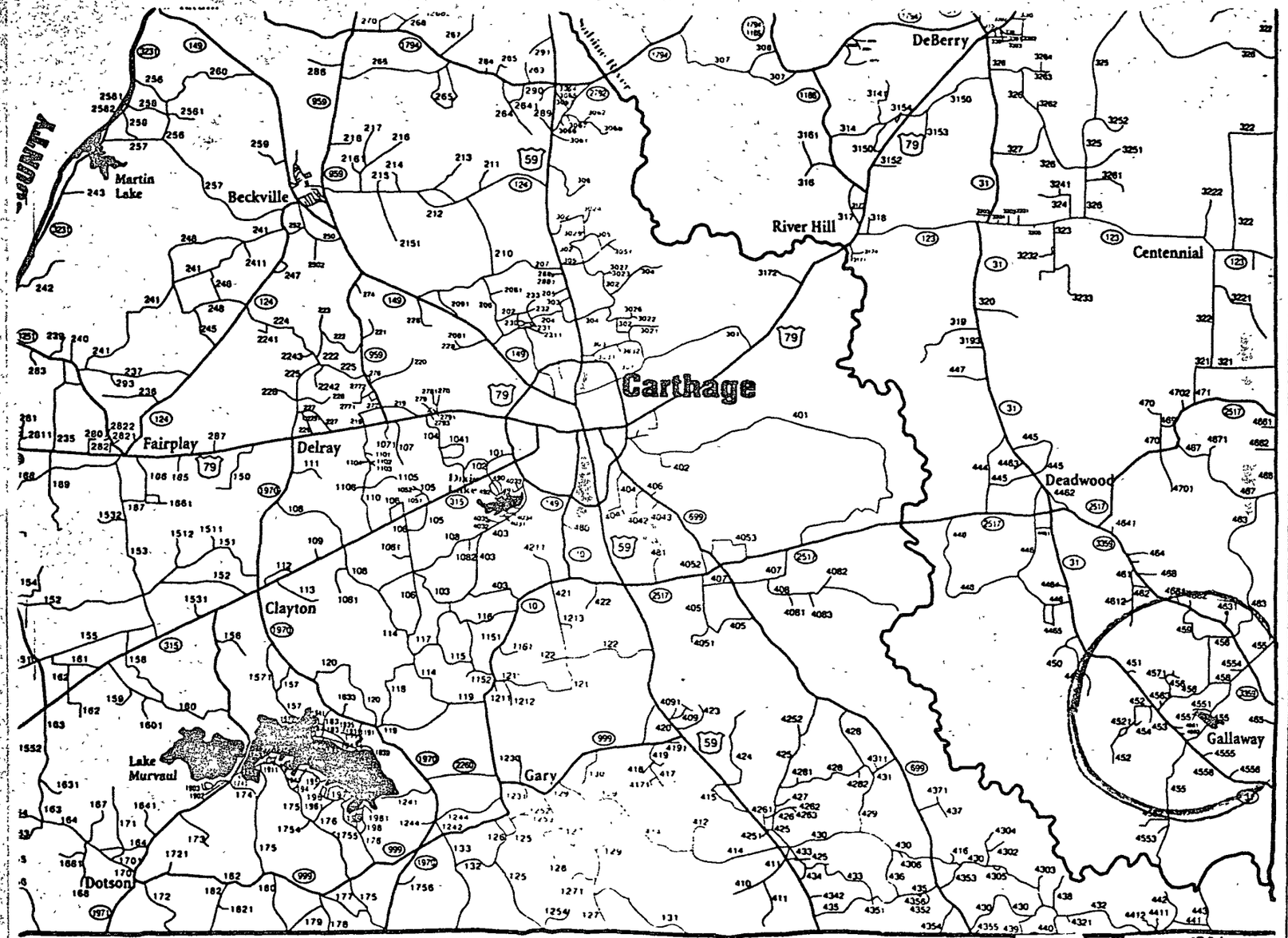
Martin Lake
Beckville
Carthage
River Hill
DeBerry
Centennial
Fairplay
Delray
Clayton
Deadwood
Gallaway
Lake Murvaul
Gary
Dotson

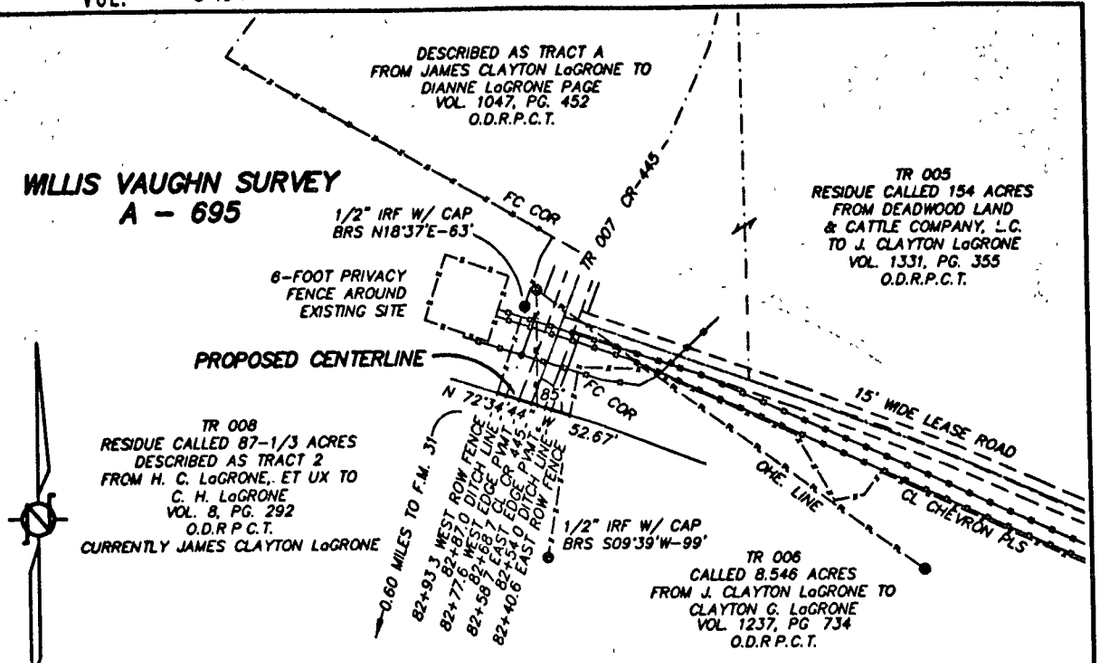

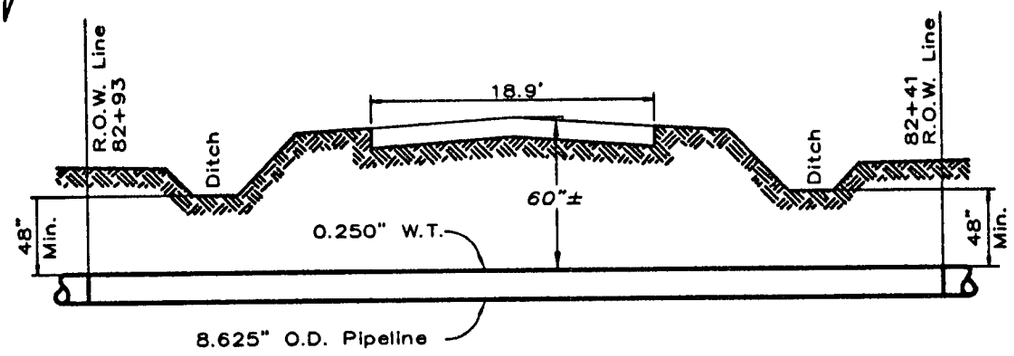

ELEVATION VIEW OF PIPELINE CROSSING ROAD
NOT TO SCALE

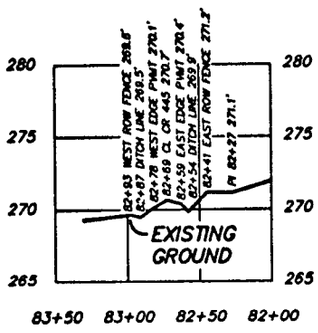

STEEL CARRIER PIPE

PIPE DESCRIPTION: 8.625" o.d.
.250" wall
5LX-52

CLASS LOCATION: class 3
M.A.O.P.: 1360 PSI
TEST PRESSURE: 2040 PSI

MARKWEST ENERGY EAST TEXAS GAS COMPANY, L.L.C.
CARTHAGE, TEXAS

POWELL CDP TO PAGE TIE-IN
ON COUNTY ROAD 445
0.60 MILES NORTH OF F. M. 31
PANOLA COUNTY, TEXAS

SCALE	DRAWN BY	DATE
0 100'	WMW	05-21-08

COUNTY JUDGES & COMMISSIONERS ASSOCIATION OF TEXAS

COMMISSIONERS EDUCATION CERTIFICATE OF COMPLETION

This is to certify that

Ronnie LaGrone

Panola County Commissioner

has successfully completed the continuing education provisions of Article 81.0025 of the Texas Local Government Code

2007

Richard Cortese, Chairman
Commissioners Education Committee

J.D. Johnson, President
County Judges & Commissioners Association of Texas

VOL. 62 PAGE 576

COUNTY JUDGES & COMMISSIONERS ASSOCIATION OF TEXAS

COMMISSIONERS EDUCATION CERTIFICATE OF COMPLETION

This is to certify that

Douglas Cotton

Panola County Commissioner

has successfully completed the continuing education provisions of Article 81.0025 of the Texas Local Government Code

2007

Richard Cortese, Chairman
Commissioners Education Committee

J.D. Johnson, President
County Judges & Commissioners Association of Texas

COUNTY JUDGES & COMMISSIONERS ASSOCIATION OF TEXAS

COMMISSIONERS EDUCATION CERTIFICATE OF COMPLETION

This is to certify that

Hermon Reed

Panola County Commissioner

has successfully completed the continuing education provisions of Article 81.0025 of the Texas Local Government Code

2007

Richard Cortese, Chairman
Commissioners Education Committee

J.D. Johnson, President
County Judges & Commissioners Association of Texas

VOL. 62 PAGE 578

COUNTY JUDGES & COMMISSIONERS ASSOCIATION OF TEXAS

COMMISSIONERS EDUCATION CERTIFICATE OF COMPLETION

This is to certify that

Dale LaGrone

Panola County Commissioner

has successfully completed the continuing education provisions of Article 81.0025 of the Texas Local Government Code

2007

Richard Cortese, Chairman
Commissioners Education Committee

J D. Johnson, President
County Judges & Commissioners Association of Texas

ELECTION SERVICES
CONTRACT FUND
BUDGET AMENDMENT #1
2008

Revenues		
Election Services Contract Receipts	8,000	
Total Revenues		8,000
Expenditures		
Elections		
Supplies	1,400	
Professional Services	6,600	
Total Expenditures		8,000

I hereby approve the above described budget and ask the Commissioners Court to please record it at the next scheduled Commissioners Court Meeting.

Helen Lloyd — Helen Lloyd

5-16-08 — Date

PANOLA COUNTY
CRIMINAL DISTRICT ATTORNEY
STATE FORFEITURE FUND
BUDGET AMENDMENT #2
FISCAL YEAR 2008

SOURCE OF REVENUES		
Cash Balance	1,052	
TOTAL		1,052
EXPENDITURES		
Criminal District Attorney		
Witness Expense	1,052	
TOTAL		1,052

I hereby approve the above describe budget and ask the Commissioners Court to please record it at the next scheduled Commissioners Court meeting.

Danny Buck Davidson

6-2-08
DATE

June 4, 2008

To the County of Panola
110 S. Sycamore St.
Carthage, TX 75633

Please find enclosed the audit conducted for the year end 12-31-07 by Robinson & Payne, PLLC.

for the Panola County Emergency Services District #1.

If you have any questions, please feel free to call.

Sincerely,

Becky Jefferson

Becky Jefferson

903-692-1414

PANOLA COUNTY EMERGENCY SERVICES DISTRICT NO. 1

ANNUAL FINANCIAL REPORT FOR THE YEAR ENDED

DECEMBER 31, 2007

THIS PAGE LEFT BLANK INTENTIONALLY

ROBINSON & PAYNE, PLLC
CERTIFIED PUBLIC ACCOUNTANTS
416 WEST PANOLA
CARTHAGE, TEXAS 75633

MEMBERS OF
AMERICAN INSTITUTE OF CERTIFIED PUBLIC ACCOUNTANTS
TEXAS SOCIETY OF CERTIFIED PUBLIC ACCOUNTANTS

TELEPHONE
(903) 693-8522

INDEPENDENT AUDITOR'S REPORT

Board of Commissioners
Panola County Emergency Services District No. 1
Carthage, Texas

We have audited the accompanying financial statements of the governmental activities and the major special revenue fund of the Panola County Emergency Services District No. 1 (the District), as of and for the year ended December 31, 2007, which collectively comprise the District's basic financial statements. These financial statements are the responsibility of the District's management. Our responsibility is to express opinions on these financial statements based on our audit.

We conducted our audit in accordance with auditing standards generally accepted in the United States of America and the standards applicable to financial audits contained in *Government Auditing Standards*, issued by the Comptroller General of the United States. Those standards require that we plan and perform the audit to obtain reasonable assurance about whether the financial statements are free of material misstatement. An audit includes examining, on a test basis, evidence supporting the amounts and disclosures in the financial statements. An audit also includes assessing the accounting principles used and significant estimates made by management, as well as evaluating the overall financial statement presentation. We believe that our audit provides a reasonable basis for our opinions.

In our opinion, the financial statements referred to above present fairly, in all material respects, the respective financial position of the governmental activities and the major special revenue fund of the District as of December 31, 2007, and the respective changes in financial position thereof, and the respective budgetary comparison for the major special revenue fund, for the year then ended in conformity with accounting principles generally accepted in the United States of America.

In accordance with *Government Auditing Standards*, we have also issued our report dated April 25, 2008, on our consideration of the District's internal control over financial reporting and on our tests of its compliance with certain provisions of laws, regulations, contracts, and grant agreements and other matters. The purpose of that report is to describe the scope of our testing of internal control over financial reporting and compliance and the results of that testing, and not to provide an opinion on the internal control over financial reporting or on compliance. That report is an integral part of an audit performed in accordance with *Government Auditing Standards* and important for assessing the results of our audit.

The management discussion and analysis and budgetary comparison information on pages 3 through 6 and 12 are not a required part of the basic financial statements but are supplementary information required by accounting principles generally accepted in the United States of America. We have applied certain limited procedures, which consisted principally of inquiries of management regarding the methods of measurement and presentation of the required supplementary information. However, we did not audit the information and express no opinion on it.

Robinson & Payne
Robinson & Payne, PLLC
Certified Public Accountants

April 25, 2008

THIS PAGE LEFT BLANK INTENTIONALLY

MANAGEMENT'S DISCUSSION AND ANALYSIS

In this section of the Annual Financial and Compliance Report, we, the managers of Panola County Emergency Services District No. 1, discuss and analyze the District's financial performance for the year ended December 31, 2007. Please read it in conjunction with the independent auditors' report on page 1, and the District's basic financial statements that begin on page 7.

FINANCIAL HIGHLIGHTS

- **The assets of the District exceeded its liabilities at the close of the most recent period by $1,314,038 (net assets).**
- **At the close of the current year, fund balance for the District's special revenue fund was $379,594.**

OVERVIEW OF THE FINANCIAL STATEMENTS

The discussion and analysis are intended to serve as an introduction to the District's basic financial statements. The District's basic financial statements are comprised of three components: 1) government-wide financial statements, 2) fund financial statements, and 3) notes to the financial statements.

The government-wide financial statements are designed to provide readers with a broad overview of the District's finances in a manner similar to the financial reports of a business enterprise. The Statement of Net Assets (on page 7) presents information on all of the District's assets and liabilities, with the difference between the two reported as net assets. Over time, increases or decreases in net assets may serve as a useful indicator of whether the financial position of the District is improving or deteriorating. The Statement of Activities (on page 9) presents information showing how the government's net assets changed during the most recent period. All changes in net assets are reported as soon as the underlying event giving rise to the change occurs, regardless of the timing of related cash flows. Thus, revenues and expenses are reported in this statement for some items that will only result in cash flows in future periods.

The fund financial statements start on page 10. The District reports only one fund type: governmental funds. Governmental funds are used to account for essentially the same functions reported as governmental activities in the government-wide financial statements. However, governmental fund financial statements focus on near-term inflows and outflows of spendable resources, as well as balances of spendable resources available at the end of the year. These statements also reflect the flow of current financial resources and supply the basis for tax levies and the appropriations budget.

The District maintains only one individual governmental fund, a special revenue fund, which it uses to account for all of its operations.

The District adopts an annual appropriated budget for its special revenue fund. A budgetary comparison statement has been provided for the special revenue fund to demonstrate compliance with this budget.

The notes to the financial statements (starting on page 13) provide narrative explanations or additional data needed for full disclosure in the government-wide statements or the fund financial statements.

GOVERNMENT-WIDE FINANCIAL ANALYSIS

Our analysis of comparative balances and changes therein for the current year's operations presents both current and prior year data and discusses significant changes in the accounts. Our analysis focuses on the net assets (Table I) and changes in net assets (Table II) of the District's governmental activities.

Net assets of the District increased from $1,177,058 to $1,314,038. Unrestricted net assets – the part of net assets that can be used to finance day-to-day operations without constraints established by legislation, legal requirements, or designations made by the Board – was $385,595 at December 31, 2007. This increase in governmental net assets was the result of the District's revenues exceeding its expenditures by $136,980, as shown in Table II on page 5.

By far the largest portion of the District's net assets, 71%, reflects its investment in capital assets (e.g., buildings and equipment). The District uses these capital assets to provide its fire protection services; consequently, these assets are not available for future spending.

Table I
Panola County Emergency Services District No. 1

NET ASSETS

	Governmental Activities	
	2007	2006
Current and other assets	$ 906,958	$ 828,091
Capital assets	928,443	927,909
Total assets	1,835,401	1,756,000
Other liabilities	521,363	578,942
Total liabilities	521,363	578,942
Net Assets:		
Invested in capital assets, net of related debt	928,443	927,909
Unrestricted	385,595	249,149
Total net assets	$ 1,314,038	$ 1,177,058

Table II
Panola County Emergency Services District No. 1

CHANGES IN NET ASSETS

	Governmental Activities	
	2007	2006
Revenues:		
General Revenues:		
Property taxes	$ 544,260	$ 477,702
Investment earnings	28,622	16,149
Total Revenue	572,882	493,851
Expenses:		
Equipment & training	31,309	36,730
Fire department operating expense	139,100	145,832
Tax assessment	4,821	4,449
Professional & legal	11,084	10,680
Insurance	34,186	30,532
Office expense	535	807
Depreciation	214,867	215,616
Total Expenses	435,902	444,646
Increase in net assets	136,980	49,205
Net assets at January 1	1,177,058	1,127,853
Net assets at December 31	$ 1,314,038	$ 1,177,058

THE DISTRICT'S FUNDS

As the District completed the year, its governmental fund reported a fund balance of $379,594, an increase of $136,446 in comparison with the prior year. This is due to the current year's revenues exceeding current year expenditures.

The Board made no amendments to the District's budget during 2007.

CAPITAL ASSETS AND DEBT ADMINISTRATION

At the end of 2007, the District had $2,214,637 invested in a broad range of capital assets, including buildings and improvements and equipment used in providing fire protection services.

This year's additions included:

Trucks & equipment	$ 208,151
Building Improvements - Gary	7,250
Totaling	$ 215,401

At year end, the District had no outstanding debt.

ECONOMIC FACTORS AND NEXT YEAR'S BUDGETS AND RATES

The District's elected and appointed officials considered many factors when setting the 2008 budget and tax rates. These factors included, but were not limited to, property values and anticipated needs of the individual fire departments and for general board expenditures.

The Board adopted a 2008 budget of $600,000 and a tax rate of $.01515.

CONTACTING THE DISTRICT'S FINANCIAL MANAGEMENT

This financial report is designed to provide our citizens, taxpayers, customers, investors, and creditors with a general overview of the District's finances and show the District's accountability for the money it receives. If you have questions about this report or need additional financial information, contact Drew Nixon, CPA, 1509 West Panola, Carthage, Texas 75633.

PANOLA COUNTY EMERGENCY SERVICES DISTRICT NO. 1
EXHIBIT 1
STATEMENT OF NET ASSETS
FOR THE YEAR ENDED DECEMBER 31, 2007

ASSETS		
Cash and Investments	$	828,705
Taxes receivable		6,000
Prepaid expenses		31,395
Other receivables		40,858
Capital assets, net of accumulated depreciation		
Building and improvements		133,247
Equipment		795,196
Total assets		1,835,401
LIABILITIES		
Accounts payable		8,148
Deferred revenues		513,215
Total liabilities		521,363
NET ASSETS		
Invested in capital assets, net of related debt		928,443
Unrestricted		385,595
Total net assets	$	1,314,038

The accompanying notes are an integral part of these financial statements.

THIS PAGE LEFT BLANK INTENTIONALLY

PANOLA COUNTY EMERGENCY SERVICES DISTRICT NO. 1
EXHIBIT 2
STATEMENT OF ACTIVITIES
FOR THE YEAR ENDED DECEMBER 31, 2007

EXPENSES	
Equipment & training	$ 31,309
Fire department operating expense	139,100
Tax assessment	4,821
Professional & legal	11,084
Insurance	34,186
Office expense	535
Depreciation	214,867
Total expenses	435,902
GENERAL REVENUES:	
Property taxes	544,260
Investment earnings	28,622
Total general revenues	572,882
Increase in net assets	136,980
Net assets – beginning of the year	1,177,058
Net assets – end of the year	$ 1,314,038

The accompanying notes are an integral part of these financial statements.

PANOLA COUNTY EMERGENCY SERVICES DISTRICT NO.1
EXHIBIT 3
BALANCE SHEET
GOVERNMENTAL FUNDS
DECEMBER 31, 2007

	Special Revenue Fund	Total Governmental Funds
ASSETS		
Cash – demand deposits	$ 328,705	$ 328,705
Cash – time deposits	500,000	500,000
Receivables (net of allowances)		
Interest	4,666	4,666
Delinquent taxes	6,000	6,000
Prepaid insurance	31,395	31,395
Due from Panola County	36,192	36,192
Total Assets	$ 906,958	$ 906,958
LIABILITIES AND FUND BALANCE		
Liabilities		
Accounts payable	$ 8,148	$ 8,148
Deferred revenues	519,216	519,216
Total Liabilities	527,364	527,364
Fund Balance		
Undesignated Fund Balance	379,594	379,594
Total Fund Balance	379,594	379,594
Total Liabilities and Fund Balance	$ 906,958	$ 906,958

The accompanying notes are an integral part of these financial statements.

PANOLA COUNTY EMERGENCY SERVICES DISTRICT NO. 1
EXHIBIT 4
STATEMENT OF REVENUES, EXPENDITURES AND CHANGES IN FUND BALANCE
GOVERNMENTAL FUNDS
FOR THE YEAR ENDED DECEMBER 31, 2007

	Special Revenue Fund	Total Governmental Funds
REVENUES		
General Revenues:		
Property taxes	$ 544,260	$ 544,260
Interest	28,622	28,622
Total Revenues	572,882	572,882
EXPENDITURES		
Equipment & training	31,309	31,309
Fire department operating expense	139,100	139,100
Tax assessment	4,821	4,821
Professional & legal	11,084	11,084
Insurance	34,186	34,186
Office expense	535	535
Capital expenditures	215,401	215,401
Total Expenditures	436,436	436,436
Net Change in Fund Balance	136,446	136,446
Fund Balance, Beginning of Year	243,148	243,148
Fund Balance, End of Year	$ 379,594	$ 379,594

The accompanying notes are an integral part of these financial statements.

PANOLA COUNTY EMERGENCY SERVICES DISTRICT NO. 1
EXHIBIT 5
SCHEDULE OF REVENUES, EXPENDITURES, AND CHANGES IN FUND BALANCE – BUDGET AND ACTUAL
SPECIAL REVENUE FUND
FOR THE YEAR ENDED DECEMBER 31, 2007

	Budgeted Amounts			Variance With Final Budget Positive (Negative)
	Original	Final	Actual Amounts	
REVENUES				
Property taxes	$ 531,000	$ 531,000	$ 544,260	$ 13,260
Interest	8,000	8,000	28,622	20,622
Total Revenues	539,000	539,000	572,882	33,882
EXPENDITURES				
Equipment & training	30,000	30,000	31,309	(1,309)
Fire department operating expense	167,700	167,700	139,100	28,600
Tax assessment	9,400	9,400	4,821	4,579
Professional & legal	14,000	14,000	11,084	2,916
Fire	5,000	5,000	-	5,000
Insurance	45,000	45,000	34,186	10,814
Office expense	900	900	535	365
Capital expenditures	267,000	267,000	215,401	51,599
Total Expenditures	539,000	539,000	436,436	102,564
Net Change in Fund Balance	-	-	136,446	136,446
Fund Balance, Beginning of Year	243,148	243,148	243,148	-
Fund Balance, End of Year	$ 243,148	$ 243,148	$ 379,594	$ 136,446

The accompanying notes are an integral part of these financial statements.

PANOLA COUNTY EMERGENCY SERVICES DISTRICT NO. 1
NOTES TO FINANCIAL STATEMENTS
DECEMBER 31, 2007

NOTE 1 - CREATION OF THE DISTRICT

The Panola County Emergency Services District No. 1 was created after a public election held in 1996, under the provision of Section 48-d of Article III of the Constitution of Texas. The District was established to provide fire protection services to residents of the District.

NOTE 2 - SUMMARY OF SIGNIFICANT ACCOUNTING POLICIES

Reporting Entity

The accompanying financial statements present the District's primary government and component units over which the District exercises significant influence. Significant influence or accountability is based primarily on operational or financial relationships with the District. The District exercises no influence over any other reporting entity; therefore, the District has no component units. The District has a relationship with Panola County, Texas, in that the Commissioners of the District, by statute, are appointed by the Commissioner's Court of Panola County, Texas. The District, however, is responsible for its own financial activities and is not considered a component unit of Panola County.

Basis of Presentation, Measurement Focus, and Basis of Accounting

The Statement of Net Assets and the Statement of Activities are government-wide financial statements. These statements include the financial activities of the overall government. The government-wide financial statements use the economic resources measurement focus and the accrual basis of accounting. Revenues are recorded when earned and expenses are recorded when a liability is incurred, regardless of the timing of the related cash flows. Property taxes are recognized as revenues in the year for which they are levied.

The governmental fund financial statements use the current financial resources measurement focus and the modified accrual basis of accounting applicable to governmental funds in accordance with the standards established by the Governmental Accounting Standards Board. Under this method, all expenditures and all revenues currently measurable and available are accrued.

The District reports the following major governmental fund:

Special Revenue Fund – The District accounts for the proceeds of specific revenue sources that are legally restricted to expenditures for specified purposes.

The District does not utilize a formal encumbrance accounting system.

PANOLA COUNTY EMERGENCY SERVICES DISTRICT NO. 1
NOTES TO FINANCIAL STATEMENTS
DECEMBER 31, 2007

NOTE 2 - SUMMARY OF SIGNIFICANT ACCOUNTING POLICIES (cont.)

Capital Assets

Capital assets, which include buildings and improvements and equipment, are reported in the governmental column in the government-wide financial statements. Such assets are recorded at historical cost or estimated historical cost if purchased or constructed. Donated capital assets are recorded at estimated fair market value at the date of donation. The District's capitalization policy includes real or personal property with a value equal to or greater than $1,000 and has an estimated life of greater than 1 year.

Buildings and improvements and equipment of the District are depreciated using the straight-line method over the following estimated useful lives:

Assets	Years
Buildings & improvements	22
Equipment	8-10

Budgets and Budgetary Accounting

The board of commissioners is responsible for preparing and adopting the District's annual budget. This budget is prepared on the modified accrual basis of accounting applicable to governmental funds. The budget is primarily a management tool. The board is responsible for monitoring expenditures within guidelines established by the budget.

NOTE 3 - FIRE PROTECTION SERVICES

Each year, the District enters into agreements with the Flatwoods, Inter Community, Woods, Clayton, Beckville, Community Four, and Gary Volunteer Fire Departments to provide fire protection and prevention services to the residents of the District. This continuous agreement may be terminated upon adequate written notice by either party.

NOTE 4 - EXPENDITURES

During 2007, the District disbursed a base amount of $16,000 to each volunteer fire department for expenses incurred in fire protection and prevention services. The District also distributed funds to the departments for training, supplies, and equipment expenses incurred. These expenditures are classified as operating expenditures. The remaining expenditures reflect the cost of goods and services shared by the District and the departments.

PANOLA COUNTY EMERGENCY SERVICES DISTRICT NO. 1
NOTES TO FINANCIAL STATEMENTS
DECEMBER 31, 2007

NOTE 5 – EXPLANATION OF CERTAIN DIFFERENCES BETWEEN THE GOVERNMENTAL FUND FINANCIAL STATEMENTS AND THE GOVERNMENT-WIDE FINANCIAL STATEMENTS

The fund balance and the change in fund balance for total governmental funds reported on the governmental fund financial statements differ from the net assets and change in net assets for governmental activities as reported in the government-wide financial statements.

When capital assets that are to be used in governmental activities are purchased or constructed, the costs of those assets are reported as expenditures in governmental funds. However, the Statement of Net Assets includes those capital assets among the assets of the District as a whole. The net effect of including the beginning balances for capital assets, net of depreciation, is an increase to net assets.

The details of capital assets at the beginning of the year are as follows:

Capital Assets At the Beginning of the Year	Historic Cost	Accumulated Depreciation	Net Value at the Beginning of the Year	Change in Net Assets
Buildings & improvements	$ 167,693	$ 32,645	$ 135,048	
Equipment	1,831,544	1,038,682	792,862	
				$ 927,910

Current year capital outlays are expenditures in the fund financial statements, but they should be shown as increases in capital assets in the government-wide financial statements. Moreover, current year depreciation expense is not reported in the fund financial statements, but is reflected as a decrease in net assets in the government-wide financial statements.

Summary reconciliations of the governmental fund Balance Sheet to the Statement of Net Assets and the Statement of Revenues, Expenditures, and Changes in Fund Balance to the Statement of Activities are presented below and on the following page.

Total Fund Balance – Governmental Funds	$ 379,594
Uncollected taxes (assumed collectible) from current & prior year levies	6,000
Capital assets, beginning of the year, net of accumulated depreciation	927,910
Current year capital outlays	215,401
Current year depreciation expense	(214,867)
Net Assets of Governmental Activities	$ 1,314,038

PANOLA COUNTY EMERGENCY SERVICES DISTRICT NO. 1
NOTES TO FINANCIAL STATEMENTS
DECEMBER 31, 2007

Total Change in Fund Balance – Governmental Funds	$ 136,446
Current year capital outlays	215,401
Current year depreciation expense	(214,867)
Change in Net Assets of Governmental Activities	$ 136,980

NOTE 6 – DEPOSITS WITH FINANCIAL INSTITUTIONS

In compliance with the Public Funds Investment Act, the District has adopted a deposit and investment policy. Specific policies applicable to deposits and investments of the District and the risks of such are described below.

a. Custodial Credit Risk-Deposits: In the case of deposits, this is the risk that in the event of a bank failure, the government's deposits may not be returned to it. The District's policy regarding types of deposits allowed is that such deposits be covered by depository insurance or fully collateralized by pledged securities held by the pledging institution's agent in the name of Panola County Emergency Services District No. 1. The highest combined balances of cash, savings, and time deposit accounts amounted to $1,067,244 and occurred during the month of December 2007. The market value of securities pledged as of the date of the highest combined balance on deposit was $1,088,404. The total amount of FDIC coverage at the time of the highest combined balance was $100,000. During the year, the District was not exposed to custodial credit risk for deposits. At December 31, 2007 the District's cash deposits were entirely covered by FDIC insurance or by pledged collateral held by the District's agent bank in the District's name.

b. Custodial Credit Risk- Investments. For an investment, this is the risk that, in the event of a failure of the counterparty, the government will not be able to recover the value of its investments or collateral securities that are in the possession of an outside party. The District's temporary investments are on deposit with First State Bank and are not included in this type of custodial credit risk. During the year, the District was not exposed to custodial credit risk for investments.

c. Concentration Risk. This risk is the risk of loss attributed to the magnitude of a government's investment in a single issuer. The District does not have a specific policy regarding concentration of credit risk, as it does not contemplate the investment of funds in such instruments. During the year, the District was not exposed to concentration of credit risk.

d. Interest Rate Risk. Interest rate risk occurs when potential purchasers of debt securities do not agree to pay face value for those securities if interest rates rise. The District does not have a specific policy regarding interest rate risk, as it does not contemplate the investment of funds in such instruments. During the year, the District was not exposed to interest rate risk.

PANOLA COUNTY EMERGENCY SERVICES DISTRICT NO. 1
NOTES TO FINANCIAL STATEMENTS
DECEMBER 31, 2007

NOTE 6 – DEPOSITS WITH FINANCIAL INSTITUTIONS (cont.)

A summary of the composition of the deposit balances as of December 31, 2007 is shown below:

Demand Deposit Accounts	$ 328,705
Certificates of Deposit	500,000
Total:	$ 828,705

NOTE 7 - AD VALOREM TAXES

The District's ad valorem taxes are levied on October 1, but do not become due until January 1 of the following year. Taxes become past due February 1 and become delinquent June 30. Because the taxes are not due and payable until January 1, no current taxes receivable are reported as of December 31.

Since delinquent taxes were due on January 1 of the fiscal and budget year, any unpaid taxes are recorded as a receivable, net of allowance for uncollectibles. This receivable has been reported in the assets section of the balance sheet and offset as deferred revenues in the liabilities section.

The following is a summary of the gross delinquent taxes and the allowance for uncollectible taxes:

Delinquent Taxes	$16,360
Allowance for Uncollectible Taxes	10,360
Net Taxes	$ 6,000

By policy, any taxes, regardless of character (delinquent, advance) collected between October 1 and December 31 are not available for use until January 1, the beginning of the next fiscal year. Therefore, all of these receivable and advance collections are recorded as deferred revenues.

A summary of taxes collected and recognized as current or deferred revenue is summarized below:

	Recognized in Current Year	Deferred Revenue
Tax collections in 2006	$ 474,438	
Collections from January 1, 2007 to September 30, 2007	69,822	
Advance collections of 2008 taxes	-	$ 477,024
Due from Panola County Tax Assessor at December 31, 2007	-	36,192
Delinquent taxes receivable (net of allowance)	-	6,000
Total	$ 544,260	$ 519,216

The 2007 tax rate per $100 valuation is .01364.

PANOLA COUNTY EMERGENCY SERVICES DISTRICT NO. 1
NOTES TO FINANCIAL STATEMENTS
DECEMBER 31, 2007

NOTE 8 – CAPITAL ASSET ACTIVITY

Capital asset activity for the year ended December 31, 2007 was as follows:

	Primary Government			
	Beginning Balance	Additions	Retirements	Ending Balance
Governmental Activities				
Buildings and improvements	$ 167,692	$ 7,250	-	$ 174,942
Equipment	1,831,544	208,151	-	2,039,695
Totals at Historic Cost	1,999,236	215,401	-	2,214,637
Less Accumulated Depreciation:				
Buildings and improvements	32,645	9,050	-	41,695
Equipment	1,038,682	205,817	-	1,244,499
Total Accumulated Depreciation	1,071,327	214,867	-	1,286,194
Governmental Activities Capital Assets, Net	$ 927,909	$ 534	$ -	$ 928,443

NOTE 9 – RISK MANAGEMENT

The District is exposed to various risks of loss related to torts; theft of, damage to, and destruction of assets; errors and omissions; injuries to employees; and natural disasters. The District maintains commercial insurance coverage covering each of those risks of loss. Management believes such coverage is sufficient to preclude any significant uninsured losses to the District. At no time during the last three fiscal years have claims exceeded commercial coverage.

NOTE 10 – COMMITMENTS AND CONTINGENT LIABILITIES

As of December 31, 2007, there were no known contingent liabilities.

ROBINSON & PAYNE, PLLC
CERTIFIED PUBLIC ACCOUNTANTS
416 WEST PANOLA
CARTHAGE, TEXAS 75633

MEMBERS OF
AMERICAN INSTITUTE OF CERTIFIED PUBLIC ACCOUNTANTS
TEXAS SOCIETY OF CERTIFIED PUBLIC ACCOUNTANTS

TELEPHONE
(903) 693-8522

INDEPENDENT AUDITOR'S REPORT ON INTERNAL CONTROL OVER FINANCIAL REPORTING AND ON COMPLIANCE AND OTHER MATTERS BASED ON AN AUDIT OF FINANCIAL STATEMENTS PERFORMED IN ACCORDANCE WITH *GOVERNMENT AUDITING STANDARDS*

To The Board of Commissioners of the
Panola County Emergency Services District No. 1
Carthage, Texas

We have audited the financial statements of the governmental activities and the major special revenue fund of the Panola County Emergency Services District No. 1, as of and for the year ended December 31, 2007, which collectively comprise the District's basic financial statements and have issued our report thereon dated April 25, 2008. We conducted our audit in accordance with auditing standards generally accepted in the United States of America and the standards applicable to financial audits contained in *Government Auditing Standards*, issued by the Comptroller General of the United States.

Internal Control Over Financial Reporting

In planning and performing our audit, we considered Panola County Emergency Services District No. 1's internal control over financial reporting as a basis for designing our auditing procedures for the purpose of expressing our opinions on the financial statements, but not for the purpose of expressing an opinion on the effectiveness of the District's internal control over financial reporting. Accordingly, we do not express an opinion on the effectiveness of the District's internal control over financial reporting.

A control deficiency exists when the design or operation of a control does not allow management or employees, in the normal course of performing their assigned functions, to prevent or detect misstatements on a timely basis. A significant deficiency is a control deficiency, or combination of control deficiencies, that adversely affects the District's ability to initiate, authorize, record, process, or report financial data reliably in accordance with generally accepted accounting principles such that there is more than a remote likelihood that a misstatement of the District's financial statements that is more than inconsequential will not be prevented or detected by the District's internal control.

A material weakness is a significant deficiency, or combination of significant deficiencies, that results in more than a remote likelihood that a material misstatement of the financial statements will not be prevented or detected by the District's internal control.

Our consideration of internal control over financial reporting was for the limited purpose described in the first paragraph of this section and would not necessarily identify all deficiencies in internal control that might be significant deficiencies or material weaknesses. We did not identify any deficiencies in internal control over financial reporting that we consider to be material weaknesses, as defined above.

Compliance and Other Matters

As part of obtaining reasonable assurance about whether Panola County Emergency Services District No. 1's financial statements are free of material misstatement, we performed tests of its compliance with certain provisions of laws, regulations, contracts and grant agreements, noncompliance with which could have a direct and material effect on the determination of financial statement amounts. However, providing an opinion on compliance with those provisions was not an objective of our audit and, accordingly, we do not express such an opinion. The results of our tests disclosed no instances of noncompliance or other matters that are required to be reported under *Government Auditing Standards.*

This report is intended for the information and use of the management and the Board of Commissioners and is not intended to be and should not be used by anyone other than these specified parties.

Robinson & Payne
Robinson & Payne, PLLC
Certified Public Accountants

April 25, 2008

PANOLA COUNTY
2008
BUDGET AMENDMENT #6

GENERAL FUND		
Revenues		
Indigent Defense Services Grant	6,630	
Cash Balance	75,220	
Total Revenues		81,850
Expenditures		
Commissioners		
Communication Telephone	(400)	
Miscellaneous	(250)	
Capital Outlay Furniture & Equipment	950	
Office Supplies & Repairs	(300)	
Total Expenditures		0
Voter Registration		
Capital Outlay Furniture and Equipment	750	
Conference and Dues	1,000	
Total Expenditures		1,750
County Auditor		
Re-Creation, Printing & Bindery	400	
Total Expenditures		400
Criminal District Attorney		
Professional Services	5,000	
Total Expenditures		5,000
Miscellaneous and Non-Departmental		
Professional Services	3,000	
Animal Control	6,000	
Benefits Termination Pay	2,700	
Total Expenditures		11,700
Health and Paupers Care		
Attorney Fees	43,000	
Child Protective Services	20,000	
Total Expenditures		63,000
GRAND TOTAL GENERAL FUND		81,850

PANOLA COUNTY
2008
BUDGET AMENDMENT #6

ROAD AND BRIDGE FUND

Revenue		
Miscellaneous (Auction)	171,950	
Total Revenue		171,950
Expenditures		
Repair and Maintenance Supplies	(1,000)	
Physicals and Drug Screening	1,000	
Furniture and Equipment	171,950	
Total Expenditures		171,950
GRAND TOTAL ROAD AND BRIDGE FUND		171,950

AIRPORT FUND

Revenue		
Cash Balance	15,500	
Total Revenue		15,500
Expenditures		
Repairs and Renovations	500	
Fuel & Repairs	15,000	
Total Expenditures		15,500
GRAND TOTAL AIRPORT FUND		15,500

CHILD PROTECTIVE SERVICES

Revenue		
Panola County Funding	20,000	
Total Revenues		20,000
Expenditures		
Supplies & Child Care Expense	20,000	
Total Expenditures		20,000
GRAND TOTAL CHILD PROTECTIVE SERVICES		20,000

PANOLA COUNTY
2008
BUDGET AMENDMENT #6

JUSTICE COURT TECHNOLOGY

Revenue		
Cash Balance	5,000	
Total Revenues		5,000
Expenditures		
Professional Services Computer	5,000	
Total Expenditures		5,000
GRAND TOTAL JUSTICE COURT TECHNOLOGY		5,000

LAW LIBRARY

Revenue		
Cash Balance	2,000	
Total Revenues		2,000
Expenditures		
Law Library, Law Books & Services	2,000	
Total Expenditures		2,000
GRAND TOTAL LAW LIBRARY		2,000

PANOLA COUNTY
2008
BUDGET AMENDMENT #6

We hereby amend the Panola County Budget for the Fiscal Year 2008 as set forth above according to the procedures outlined under Vernons Texas Codes Annotated Local Government Code, Chapter 111, Subchapter A Section 111.010. The 2008 Panola County Budget is hereby so amended and we find and declare that a grave emergency and public necessity exists to meet unusual and unforeseen conditions which could not, by reasonably diligent thought and attention, have been included in the original 2008 budget as adopted. A copy of this Order is to be filed with the County Clerk and Attached to the Budget originally adopted for 2008.

Signed on this 9th day of June, 2008.

County Judge

Commissioner Precinct # 1

Commissioner Precinct # 3

Commissioner Precinct # 2

Commissioner Precinct # 4

Passed and approved by the Commissioners Court of Panola County on the 9th day of June, 2008 as the same appears on file in the office of the County Clerk of Panola County.

County Clerk

VOL. 62 PAGE 608

Analysis of the GASB Liability Related to Post-Retiree Health Benefits For Panola County As of December 31, 2007

Prepared by:
Gary Monnin, FSA, MAAA
and
Jeff Yeatman, ASA, MAAA

512 328 5854
email: gpmonnin@gpmonnin.com

June 5, 2008

G. P. MONNIN CONSULTING, INC.

Analysis of the GASB Liability
Related to
Post-Retiree Health Benefits
For Panola County
As of December 31, 2007

I. Scope

G.P. Monnin Consulting, Inc. prepared an analysis of the GASB Liability for Panola County for post-retiree health benefits as of December 31, 2006.

Panola requested GPMC to update this study but not to perform a formal study as of December 31, 2007.

GPMC did not analyze the effect of any other possible benefit such as dental or life.

II. Reliances

In performing the analysis, GPMC relied upon census, premium data, and benefit structures, among other items presented by representatives of Panola County.

GPMC relied upon the data presented and did not perform an independent audit.

III. Plan Provisions

Employees who retire at the age of 60 or above with 8 years of TCDRS service are eligible to remain in the plan, and employees who retire with 30 or more years of service are eligible to remain in the plan regardless of their age at retirement. Employees whose attained age and years of TCDRS service combine to equal or exceed 75 are also eligible.

Life insurance coverage is not available to retirees. Dental insurance is on a voluntary basis and is not subsidized by Panola County. Medical benefits are provided through the Texas Association of Counties Insurance Pool (TAC). The retiree rate as of the date of this valuation was 610.98, and the rate for the spouse of a retiree was 336.20. Panola County currently pays the entire cost of the retiree's coverage but does not subsidize the spouse's coverage.

IV. GASB

The Government Accounting Standards Board published a Guideline regarding the accounting and financial reporting by employers for post employment benefits other than pensions.

G. P. MONNIN CONSULTING, INC.

This document gives guidance regarding the methods and timing for reporting.

The effect of the Guideline is to cause the cost of retiree benefits to be paid for during the working lifetime of the employees. This requires pre-funding or accruing of a liability. At the outset, there will be an initial unfunded liability. There will also be an annual required contribution to the plan which in general is the normal cost for the year and a component for the amortization of the unfunded liability. The unfunded liability is generally funded over a period not to exceed 30 years.

An actuarial valuation is required at least biennially for plans with total membership of 200 or more and at least triennially for plans with total membership of fewer than 200. Certain "shortcut" rules are available for plans with membership less than 100. The rules would be effective for periods beginning after December 15, 2006 for Phase I governments (those with total annual revenues of 100 million or more); after December 15, 2007 for Phase II governments (those with total annual revenues of 10 million or more but less than 100 million); and after December 15, 2008 for Phase III governments (those with total annual revenues of less than 10 million).

The benefits pre-funded are post employment healthcare benefits including medical, dental, vision, hearing, and other health related benefits. Other forms of post employment benefits – for example life insurance, disability, long-term care, and other benefits – when provided separately from a defined benefit pension plan – are also funded.

A key provision in the GASB regulation relates to implicit subsidies. An example of an implicit subsidy would be a situation where the plan provides that an employee reimburse the plan at 100% of the blended cost, not the actual cost. For example, if the plan purchases insurance from an insurance company to provide the medical benefits at an average cost of 200 per employee where this 200 is paid for by all active and retired employees, a subsidy may occur. The actual underlying cost might be 150 for a 25-year-old employee and 400 for a 50-year-old employee. When a person retires, and the company provides retiree health benefits, and charges at the **blended** rate, it is easy to see that the retiree is not paying his full share of the cost. In the example above, the actual cost for a 50 year old is 400 but he is reimbursing only 200. Thus, there is a subsidy and the value of this subsidy needs to be pre-funded during the working lifetime of the employee.

GASB requires that the liabilities be separately calculated for active employees and for currently retired employees.

V. Assumptions

The assumptions outlined in this analysis are attached as Appendix A.

It is intended that these assumptions be the assumptions of Panola County. It is GPMC's role to discuss assumptions with Panola County, but it is the ultimate responsibility of Panola County to make the appropriate assumptions for valuing the liability.

Medical inflation is taken at 10% for pre-Medicare grading down to 5% in the ultimate.

Panola County did not have a lapse study. Panola County did, however, provide the year-end census data and terminations for a 3-year period. GPMC analyzed the census data and developed its own set of lapse assumptions. GPMC believes that these lapse assumptions are reasonable but Panola County should review these assumptions to determine if they agree. Rates of retirement were similarly derived from the data provided by Panola County.

The assumptions were not updated for this study.

Rates of disability were derived from a Society of Actuaries study. These were not tested against Panola County experience.

Mortality was taken as the 83 GAM Table sex distinct.

The interest discount rate assumed in 2006 was 6%. According to GASB, "the investment return assumption (discount rate) should be the estimated long term investment yield on the investments that are expected to be used to finance the payment of benefits, with consideration given to the nature and mix of current and expected investments."

Panola funded a Trust during 2007. The Trust is invested in short term CDs earning roughly 3% Since Panola is invested in short term instruments, as of the writing of this report, and intends to remain in short term instruments, the appropriate interest rate should be an estimate of the rates that can be earned on short term investments in the future. GPMC reviewed increases in the CPI Index as well as interest rates related to six month CDs and one-year treasuries. An assumption that the CPI Index grows at 2½ to 3% per year is appropriate. Reviewing historical data, the spread above the increase in CPI Index for one-year treasuries is approximately 200 basis points. This would lead to an interest assumption of 4½% over the long term. However, in low interest rate environments the spread between the Treasury and inflation tends to be smaller, and in all interest rate environments it tends to fluctuate fairly dramatically. One could argue then that the interest assumption could be as low as 4% with the current investment policy.

Following discussions with Panola, the decision to use a 4.5% interest assumption was made.

The Texas Association of Counties Insurance Pool (TAC) is a large self-funded pool, but the rates that a specific group within the pool pays are based upon a blend of the experience of the pool and the experience of that group. This blend is based on the credibility of the specific group's experience. TAC then provides a rate to that group similar to an insurance company providing a rate to a fully insured group. For this reason, GPMC chose to treat Panola County as if it was a fully insured group. GPMC makes the assumption that TAC is appropriately pricing the benefits on a blended basis. GPMC then "unblends" these rates to determine

the true cost by age. This was straightforward since GPMC had Panola County's census and GPMC has a set of age/sex factors to unblend the rates and generate the same overall average cost. The end result is a table of rates by age that reflect the underlying increase in cost by age. To accomplish this, GPMC coded a proxy plan similar to Panola's plan into its Houghton Medical Expense Manual. GPMC noted that the employee rates were higher than the Houghton rates and the spouse rates were lower. GPMC derived a factor to apply to the Houghton data to reproduce in total the employee and spouse rates.

Appendix B shows the unblended rates by age.

GPMC assumed that the percentage of the actual retiree premium paid by the retiree would remain constant. Panola County has a policy in place that requires the retiree to pay the difference between the premium applicable to a retiree not covered by Medicare and the premium applicable to a retiree who has Medicare coverage. Under the current insurance plan, there is no difference between these two rates. GPMC used the assumption that the current rate structure would not change to include a separate rate for retirees with Medicare coverage.

VI. Census

Attached as Appendix C is the census utilized in the analysis.

VII. Actuarial Method

In the 2006 report, the method utilized was the attained age method. The allocation of the total liability into accrued and future was based upon a straight years of service ratio. The retirement age used assumed a weighted average expected retirement age based on termination rate assumptions.

The accrued liability was assumed to be amortized over a 30-year period, decreasing yearly.

In this report, GPMC recommends that Panola utilize the projected unit credit approach. The net result is that initially the accrued liability is the same but the normal cost funding is lower in the earlier years. GPMC will present results under the projected unit credit method.

VIII. Results

The following results are appropriate for the 4.5% interest assumption.

12/31/2006	Liability Present Value			Annual		
Category	Past Service	Future	Total	Amort of Unfunded Past Service	Normal Cost	Total
Active Ees	5,744,182	5,677,445	11,421,627			
Retirees	5,848,249	-	5,848,249			
Total	11,592,431	5,677,445	17,269,876	681,031	569,030	1,250,061

2007 Reporting			
	Annual Required Contribution	1,250,061	
less	Retiree Pay as you go cost	(426,581)	
	Net OPEB Liability	823,480	
Less	Assets in Trust	10,005,995	
	Net OPEB Liability	(9,182,515)	Negative is asset

12/31/2007	Liability Present Value			Annual		
Category	Past Service	Future	Total	Amort of Unfunded Past Service	Normal Cost	Total
Active Ees	5,794,880	5,886,220	11,681,100			
Retirees	6,634,888	-	6,634,888			
Total	12,429,768	5,886,220	18,315,988	144,764	583,089	727,853
Unfunded	2,423,773					

The left side of the chart for the years provides the Actuarial Present Value of benefits. This is the **total liability**, but it does not yet need to be booked. The right side of the chart provides the **annual cost** to fund for the benefits.

Reviewing the Actuarial Present Value, the chart is broken into past service, future service, and total. The past service is also referred to as accrued service. The split between the accrued liability and future liability is based upon the ratio of

years of service performed and total expected years of service on an employee by employee basis. You will note that on retired employees, the entire cost is allocated to past service since they are retired.

The right side of the chart, the annual cost or the Annual Required Cost, is also broken into past service, future and total. Under ideal circumstances, past service liability would already be funded or accrued. Since at the date of implementation there is generally no past service liability established, GASB allows the employer to amortize the cost of the past service liability over as many as thirty years.

The normal cost is the estimated cost next year to provide for the benefits earned by active employees next year.

The sum of the past service annual cost and the normal cost is the total cost required for the year. The total for 2008 is 727,853. This equates to a percentage of 14.01% of Panola's 2008 budgeted payroll of 5,194,534.

The normal cost element only is 2.787% of the budgeted payroll for 2008. Using this percentage would require funding the 144,764 separately.

The 2007 Reporting section shows the development of the net OPEB Asset. This will show up on the books of Panola at year-end 2007.

GPMC is available to discuss the results.

GPM/sf
06050801GM032

Appendix A

Retiree Medical Assumptions

Latest ben age	119
Medicare age	65

Medical Inflation		Pre-Medicare	Post-Medicare
Year	1	10.0%	8.0%
	2	9.5%	7.7%
	3	9.0%	7.4%
	4	8.5%	7.1%
	5	8.0%	6.8%
	6	7.5%	6.5%
	7	7.0%	6.2%
	8	6.5%	5.9%
	9	6.0%	5.6%
	10	5.5%	5.3%
	11	5.0%	5.0%
	12	5.0%	5.0%
	13	5.0%	5.0%
	14	5.0%	5.0%
	15+	5.0%	5.0%

Beginning pre medicare cost	610.98	EE
Beginning post medicare cost	610.98	EE
Beginning pre medicare cost	336.20	SP
Beginning post medicare cost	336.20	SP

Lapse with no benefit

Att age less than 50			Att age greater	50	2.5%
dur	1	20.0%	than or equal	51	2.5%
	2	10.0%	to 50	52	2.5%
	3	9.0%		53	2.5%
	4	8.0%		54	2.5%
	5	5.0%		55	2.5%
	6	4.0%		56	2.5%
	7	3.0%		57	2.5%
	8	3.0%		58	2.5%
	9	3.0%		59	2.5%
	10	2.0%		60	2.5%
	11	2.0%		61	2.5%
	12	2.0%		62	2.5%
	13	2.0%		63	2.5%
	14	2.0%		64	2.5%
	15+	2.0%			

Rates of Retirement		
	0	0.0%
	36	0.0%
	37	0.0%
	38	0.0%
	39	0.0%
	40	0.0%
	41	0.0%
	42	0.0%
	43	0.0%
	44	0.0%
	45	4.5%
	46	4.5%
	47	4.5%
	48	4.5%
	49	4.5%
	50	4.5%
	51	4.5%
	52	4.5%
	53	4.5%
	54	4.5%
	55	4.5%
	56	4.5%
	57	4.5%
	58	4.5%
	59	4.5%
	60	10.0%
	61	15.0%
	62	20.0%
	63	20.0%
	64	20.0%
	65	100.0%
	66	100.0%
	67	100.0%
	68	100.0%
	69	100.0%
	70	100.0%

Mortality
83GAM Sex Distinct

Interest Discount	4.50%

Rates of Disability			
15	0.020%	43	0.080%
16	0.020%	44	0.080%
17	0.020%	45	0.140%
18	0.020%	46	0.140%
19	0.020%	47	0.140%
20	0.020%	48	0.140%
21	0.020%	49	0.140%
22	0.020%	50	0.140%
23	0.020%	51	0.140%
24	0.020%	52	0.140%
25	0.050%	53	0.140%
26	0.050%	54	0.140%
27	0.050%	55	0.380%
28	0.050%	56	0.380%
29	0.050%	57	0.380%
30	0.050%	58	0.380%
31	0.050%	59	0.380%
32	0.050%	60	0.380%
33	0.050%	61	0.380%
34	0.050%	62	0.380%
35	0.080%	63	0.380%
36	0.080%	64	0.380%
37	0.080%	65	0.130%
38	0.080%	66	0.130%
39	0.080%	67	0.130%
40	0.080%	68	0.130%
41	0.080%	69	0.130%
42	0.080%	70	0.130%

Appendix B

Medical Costs by Age

Age	Male EE	Female EE	Male Spouse	Female Spouse
15	222.47	403.32	314.22	460.39
16	222.47	403.32	314.22	460.39
17	222.47	403.32	314.22	460.39
18	222.47	403.32	314.22	460.39
19	222.47	403.32	314.22	460.39
20	222.47	403.32	314.22	460.39
21	222.47	403.32	314.22	460.39
22	222.47	403.32	314.22	460.39
23	222.47	403.32	314.22	460.39
24	222.47	403.32	314.22	460.39
25	222.47	403.32	314.22	460.39
26	222.47	403.32	314.22	460.39
27	222.47	403.32	314 22	460.39
28	232.54	409.76	328.84	464.05
29	242.62	416.19	343.46	467.70
30	252.69	422.63	358.07	471.36
31	262.76	429.06	372.69	475.01
32	272.84	435.50	387.31	478.66
33	288.44	441.93	394.62	482.32
34	304.04	448.37	401.93	485.97
35	319.64	454.81	409.23	489.63
36	335.24	461.24	416.54	493.28
37	350.84	467.68	423 85	496.94
38	363.22	474.11	431.16	500.59
39	375.61	480.55	438.47	504.24
40	387.99	486.98	445.78	507.90
41	400.37	493 42	453.08	511.55
42	412.75	499.85	460.39	515.21
43	431.08	523.71	466.11	520.92
44	449.41	547.57	471.82	526.63
45	467.74	571.42	477 53	532.35
46	486.07	595.28	483.25	538.06
47	504.40	619.13	488.96	543.77
48	531.90	632.85	517.06	553 60
49	559.39	646.56	545.16	563.43
50	586.89	660.27	573.27	573.27
51	614.38	673.99	601.37	583.10
52	641.88	687.70	629.47	592.93
53	669.37	702.81	654.38	610.53
54	696.87	717.93	679.29	628.13
55	724.36	733.04	704.20	645.74
56	751.86	748.15	729.12	663.34
57	779.35	763.26	754.03	680.94
58	819.23	783.83	782.13	701.74
59	859.10	804.40	810.23	722.53
60	898.98	824.97	838.33	743.32

GASB Panola Retiree.xlsAssump print 3

Medical Costs by Age

Age	Male EE	Female EE	Male Spouse	Female Spouse
61	938.86	845.55	866.44	764.12
62	978.74	866.12	894.54	784.91
63	1,034.64	905.93	937.05	823.77
64	1,090.53	945.74	979.57	862.63
65	335.47	335.47	335.47	335.47
66	345.16	345.16	345.16	345.16
67	357.20	357.20	357.20	357.20
68	367.53	367.53	367.53	367.53
69	378.25	378.25	378.25	378.25
70	388.80	388.80	388.80	388.80
71	399.10	399.10	399.10	399.10
72	409.18	409.18	409.18	409.18
73	417.01	417.01	417.01	417.01
74	424 33	424.33	424.33	424.33
75	431.01	431.01	431.01	431.01
76	437.60	437.60	437.60	437.60
77	443.96	443.96	443.96	443.96
78	450.02	450.02	450.02	450.02
79	455.96	455.96	455.96	455.96
80	461 89	461.89	461.89	461.89
81	467.73	467.73	467.73	467.73
82	473.48	473.48	473.48	473.48
83	478 99	478.99	478 99	478.99
84	484.49	484.49	484 49	484.49
85	489.85	489.85	489.85	489.85
86	495.21	495.21	495.21	495.21
87	500.73	500.73	500.73	500.73
88	506.12	506.12	506.12	506.12
89	511.64	511.64	511.64	511.64
90	517.36	517.36	517.36	517.36
91	523 09	523.09	523.09	523.09
92	528.95	528.95	528.95	528.95
93	534.87	534.87	534.87	534.87
94	541.03	541.03	541.03	541.03
95	547.25	547.25	547.25	547.25
96	553.61	553.61	553.61	553.61
97	560.01	560.01	560.01	560.01
98	566.61	566.61	566.61	566.61
99	573.37	573.37	573.37	573.37

Appendix C

G. P. MONNIN CONSULTING, INC.

Active Census

EE #	Hire date	EE DOB	EE Sex	(10/1/1950 if none) SP DOB	SP Sex	Spouse?	Prior Service Years	Prior Service Months
1	10/24/90	10/15/57	M	12/09/56	F	Y	0	0
2	04/26/07	03/16/44	M	09/22/47	F	Y	0	0
3	08/15/84	06/21/63	M	10/01/50	F	N	0	0
4	02/01/03	08/14/50	M	10/01/50	F	N	0	0
5	04/09/02	04/01/69	M	10/01/50	F	N	0	0
6	07/02/03	07/28/57	M	10/01/50	F	N	0	0
7	09/26/93	01/18/71	F	10/01/50	M	N	0	0
8	05/03/00	04/06/58	M	10/01/50	F	N	0	0
9	02/01/99	07/27/48	M	04/29/64	F	Y	0	0
10	01/01/99	10/22/56	M	10/01/50	F	N	0	0
11	03/05/07	05/06/50	M	09/10/57	F	Y	0	0
12	08/20/88	10/19/44	F	10/01/50	M	N	0	0
13	04/02/92	07/08/55	M	10/01/50	F	N	0	0
14	09/30/99	06/23/58	F	10/01/50	M	N	0	0
15	05/30/01	06/19/53	M	08/10/62	F	Y	0	0
16	10/05/95	04/29/72	F	10/01/50	M	N	0	0
17	10/14/04	06/01/45	M	10/01/50	F	N	0	0
18	12/21/94	04/07/48	F	10/01/50	M	N	0	0
19	06/15/75	08/18/53	M	08/30/59	F	Y	0	0
20	08/29/02	10/04/49	M	03/25/53	F	Y	0	0
21	07/12/06	12/02/73	F	10/01/50	M	N	0	0
22	05/20/87	03/31/58	F	10/01/50	M	N	0	0
23	03/05/07	07/23/84	F	10/01/50	M	N	0	0
24	08/20/99	02/06/54	F	10/01/50	M	N	0	0
25	02/01/99	04/05/42	M	08/30/48	F	Y	0	0
26	11/14/96	10/06/55	M	02/20/61	F	Y	0	0
27	12/15/04	06/05/60	F	10/01/50	M	N	0	0
28	07/31/06	11/18/72	M	10/01/50	F	N	0	0
29	08/15/06	01/23/83	F	10/01/50	M	N	0	0
30	05/29/96	11/29/45	M	11/22/43	F	Y	0	0
31	04/23/04	03/17/49	M	12/16/49	F	Y	0	0
32	10/14/87	11/10/52	F	10/01/50	M	N	0	0
33	04/16/87	12/21/56	F	10/01/50	M	N	0	0
34	02/01/96	06/01/61	F	10/01/50	M	N	0	0
35	04/02/92	03/01/66	F	10/01/50	M	N	0	0
36	02/02/92	09/22/59	M	10/01/50	F	N	0	0
37	09/11/97	12/05/54	M	10/01/50	F	N	0	0
38	02/01/80	11/04/41	M	10/01/50	F	N	0	0
39	02/01/03	10/12/56	M	10/01/50	F	N	0	0
40	04/26/95	01/09/61	M	10/01/50	F	N	0	0
41	11/18/93	02/15/51	M	08/03/59	F	Y	0	0
42	11/06/97	08/03/61	M	10/01/50	F	N	0	0
43	11/08/01	02/01/67	M	10/01/50	F	N	0	0
44	07/04/90	03/17/61	F	06/13/58	M	Y	0	0
45	02/01/05	06/06/61	M	10/01/50	F	N	0	0
46	07/18/03	11/23/57	F	10/01/50	M	N	0	0
47	06/17/04	08/29/56	F	10/01/50	M	N	0	0

Active Census

EE #	Hire date	EE DOB	EE Sex	(10/1/1950 if none) SP DOB	SP Sex	Spouse?	Prior Service Years	Prior Service Months
48	06/01/89	12/18/62	M	10/01/50	F	N	0	0
49	08/15/06	01/20/83	M	10/01/50	F	N	0	0
50	09/04/97	04/25/65	M	07/24/65	F	Y	0	0
51	04/07/05	04/29/44	M	10/30/46	F	Y	0	0
52	12/28/89	03/08/67	M	10/01/50	F	N	0	0
53	10/09/00	07/19/68	F	10/01/50	M	N	0	0
54	05/19/00	11/30/80	F	10/01/50	M	N	0	0
55	03/03/03	10/09/74	M	08/02/75	F	Y	0	9
56	10/23/06	01/23/63	F	10/01/50	M	N	0	0
57	04/22/99	09/14/60	F	10/01/50	M	N	0	0
58	11/13/98	07/15/55	M	12/13/54	F	Y	0	0
59	06/01/07	09/17/79	M	10/01/50	F	N	0	0
60	04/20/00	01/22/51	F	10/01/50	M	N	0	0
61	10/20/04	03/08/62	M	10/01/50	F	N	11	11
62	05/28/97	09/27/58	M	10/01/50	F	N	0	0
63	10/11/00	05/28/39	M	10/01/50	F	N	0	0
64	02/01/03	08/27/53	M	01/22/58	F	Y	12	4
65	12/22/93	03/17/50	M	10/01/50	F	N	0	0
66	04/05/07	11/24/47	F	10/01/50	M	N	0	0
67	02/01/07	04/11/75	M	10/01/50	F	N	0	0
68	09/07/95	04/25/62	F	07/27/60	M	Y	0	0
69	05/06/99	05/06/73	F	10/01/50	M	N	0	0
70	11/06/01	04/10/74	M	10/01/50	F	N	0	0
71	05/16/05	04/09/69	F	10/01/50	M	N	0	0
72	12/01/88	01/15/56	M	10/01/50	F	N	0	0
73	09/15/88	12/14/55	F	09/15/52	M	Y	0	0
74	04/02/02	07/03/79	M	10/01/50	F	N	0	0
75	03/04/06	04/15/47	M	10/01/50	F	N	0	0
76	08/18/86	09/21/48	F	10/01/50	M	N	0	0
77	02/03/95	12/29/57	M	10/01/50	F	N	0	0
78	12/01/95	12/18/59	F	10/01/50	M	N	0	0
79	06/01/06	07/09/80	F	10/01/50	M	N	0	0
80	07/23/87	08/08/57	F	10/01/50	M	N	0	0
81	10/30/95	12/22/49	M	10/01/50	F	N	0	0
82	04/11/02	05/11/56	M	10/01/50	F	N	0	0
83	05/15/00	09/09/53	F	10/01/50	M	N	0	0
84	08/12/96	04/28/45	F	10/01/50	M	N	0	0
85	02/01/03	08/12/58	M	10/01/50	F	N	0	0
86	06/21/03	12/28/56	M	12/25/59	F	Y	0	0
87	02/01/89	07/15/52	M	11/13/49	F	Y	0	0
88	07/12/92	02/21/72	M	10/01/50	F	N	0	0
89	10/18/00	04/08/78	M	10/01/50	F	N	0	0
90	02/01/07	06/06/76	F	10/01/50	M	N	0	0
91	05/25/07	01/13/84	M	10/01/50	F	N	0	0
92	02/04/99	05/31/48	F	10/01/50	M	N	0	0
93	02/19/99	09/19/47	F	07/21/44	M	Y	0	0
94	05/30/07	02/27/67	F	10/01/50	M	N	0	0

Macro Panola Active.xlsCensus Print

Active Census

EE #	Hire date	EE DOB	EE Sex	(10/1/1950 If none) SP DOB	SP Sex	Spouse?	Prior Service Years	Prior Service Months
95	01/16/98	11/28/54	F	10/01/50	M	N	0	0
96	06/01/06	03/26/52	M	10/01/50	F	N	0	0
97	02/04/96	09/18/51	M	10/01/50	F	N	0	0
98	01/14/06	09/25/70	F	10/01/50	M	N	4	1
99	05/03/06	05/18/80	F	10/01/50	M	N	0	0
100	05/10/00	11/18/69	M	10/01/50	F	N	0	0
101	12/11/02	10/28/78	M	10/01/50	F	N	0	0
102	07/01/91	11/11/53	M	10/01/50	F	N	0	0
103	04/14/05	07/14/84	M	10/01/50	F	N	0	0
104	11/06/97	01/20/49	M	10/01/50	F	N	0	0
105	06/26/06	05/30/83	M	10/01/50	F	N	0	0
106	05/13/96	10/09/64	M	10/01/50	F	N	0	0
107	08/01/85	12/17/61	M	10/01/50	F	N	0	0
108	05/28/97	10/20/51	M	10/01/50	F	N	0	0
109	07/15/04	05/05/45	M	10/29/39	F	Y	0	0
110	06/06/02	01/03/61	M	10/01/50	F	N	0	0
111	10/28/07	04/04/72	F	10/01/50	M	N	0	0
112	10/03/81	03/05/57	M	10/01/50	F	N	0	0
113	11/03/05	03/08/56	M	10/01/50	F	N	0	0
114	02/01/07	07/10/70	M	10/01/50	F	N	0	0
115	03/18/03	04/14/80	F	10/01/50	M	N	0	0
116	12/02/92	07/25/64	F	10/01/50	M	N	0	0
117	09/24/04	04/21/44	M	10/01/50	F	N	0	0
118	05/03/00	02/21/65	M	10/01/50	F	N	0	0
119	10/25/89	12/16/43	F	10/23/42	M	Y	0	0
120	08/01/90	05/30/67	F	10/01/50	M	N	0	0
121	09/25/99	01/22/80	F	09/11/77	M	Y	0	0
122	02/10/77	05/08/52	F	10/01/50	M	N	0	0
123	02/01/01	08/13/34	M	10/01/50	F	N	0	0
124	08/01/93	11/16/55	F	08/03/50	M	Y	0	0
125	06/01/92	09/01/71	M	10/01/50	F	N	0	0
126	07/27/07	07/05/61	F	10/01/50	M	N	0	0
127	11/23/07	12/03/51	M	06/24/46	F	Y	0	0
128	07/01/88	08/23/64	F	10/01/50	M	N	0	0
129	10/25/02	11/14/77	M	10/01/50	F	N	0	0
130	05/03/06	09/12/48	M	10/01/50	F	N	0	0
131	05/30/01	07/28/59	F	10/01/50	M	N	0	0
132	06/06/96	04/03/72	F	10/01/50	M	N	0	0
133	04/07/00	05/16/73	M	10/01/50	F	N	0	0
134	12/13/06	12/09/48	F	10/01/50	M	N	0	0
135	11/08/07	06/29/84	F	10/01/50	M	N	0	0
136	09/25/02	10/14/59	F	10/01/50	M	N	0	0
137	07/02/03	03/27/71	F	10/01/50	M	N	0	0
138	12/01/73	04/16/51	F	10/01/50	M	N	0	0
139	08/29/06	08/21/84	M	10/01/50	F	N	0	0
140	04/08/05	07/06/83	M	10/01/50	F	N	0	0
141	02/24/06	11/01/46	M	10/01/50	F	N	0	0

Macro Panola Active.xlsCensus Print

Active Census

EE #	Hire date	EE DOB	EE Sex	(10/1/1950 if none) SP DOB	SP Sex	Spouse?	Prior Service Years	Prior Service Months
142	07/30/06	05/23/50	F	10/01/50	M	N	0	0
143	11/29/07	09/28/82	M	10/01/50	F	N	0	0
144	05/02/07	01/29/75	M	10/01/50	F	N	0	0
145	04/17/03	01/09/45	F	10/01/50	M	N	0	0
146	06/09/95	01/04/55	F	10/01/50	M	N	0	0
147	11/10/06	02/17/44	F	02/17/44	M	Y	0	0
148	01/05/06	09/22/60	F	10/01/50	M	N	0	0
149	03/14/01	07/01/71	F	10/01/50	M	N	0	0
150	04/07/05	01/13/52	M	10/01/50	F	N	0	0
151	06/03/07	11/08/62	F	10/01/50	M	N	0	0
152	05/17/00	02/07/66	F	10/01/50	M	N	0	0
153	09/01/03	06/10/48	M	10/01/50	F	N	0	0

Macro Panola Active.xlsCensus Print

Retiree Census

EE #	EE DOB	EE Sex	(10/1/1950 if none) SP DOB	SP Sex	Spouse?
1	01/03/30	M	10/1/1950	F	N
2	06/21/38	M	10/1/1950	F	N
3	04/08/36	M	07/10/40	F	Y
4	01/06/39	M	10/1/1950	F	N
5	01/06/26	M	10/1/1950	F	N
6	04/13/46	F	10/1/1950	M	N
7	03/17/38	M	10/1/1950	F	N
8	01/03/37	M	10/1/1950	F	N
9	01/18/49	M	10/1/1950	F	N
10	08/11/43	F	10/1/1950	M	N
11	06/07/37	M	10/1/1950	F	N
12	08/28/20	M	10/1/1950	F	N
13	08/19/53	M	10/1/1950	F	N
14	09/04/39	M	12/21/39	F	Y
15	07/31/35	M	10/1/1950	F	N
16	06/10/29	M	10/1/1950	F	N
17	02/23/27	F	10/1/1950	M	N
18	12/22/34	M	10/1/1950	F	N
19	06/16/34	M	10/1/1950	F	N
20	08/06/18	M	10/1/1950	F	N
21	09/08/41	M	10/1/1950	F	N
22	08/04/41	M	10/1/1950	F	N
23	09/14/34	M	10/1/1950	F	N
24	07/05/29	M	10/1/1950	F	N
25	10/13/44	M	02/17/56	F	Y
26	02/28/44	M	10/1/1950	F	N
27	05/16/44	M	12/05/45	F	Y
28	02/02/31	M	10/1/1950	F	N
29	11/14/52	M	10/1/1950	F	N
30	05/22/35	M	10/1/1950	F	N
31	05/12/18	M	10/1/1950	F	N
32	02/22/43	M	10/1/1950	F	N
33	08/03/43	F	10/1/1950	M	N
34	04/12/24	F	10/1/1950	M	N
35	07/14/44	M	10/1/1950	F	N
36	04/02/29	F	10/1/1950	M	N
37	07/07/48	M	10/1/1950	F	N
38	02/03/41	M	10/1/1950	F	N
39	09/25/32	F	10/1/1950	M	N
40	05/06/46	M	10/1/1950	F	N
41	07/27/41	F	10/1/1950	M	N
42	02/12/39	M	10/1/1950	F	N
43	07/15/47	F	10/1/1950	M	N
44	10/26/32	M	10/10/38	F	Y
45	04/01/38	M	10/1/1950	F	N
46	11/27/53	F	10/1/1950	M	N
47	03/20/30	F	10/1/1950	M	N

Macro Panola Retiree.xlsCensus Print

Retiree Census

EE #	EE DOB	EE Sex	(10/1/1950 if none) SP DOB	SP Sex	Spouse?
48	10/02/34	F	10/1/1950	M	N
49	04/10/33	F	10/1/1950	M	N
50	08/02/07	F	10/12/52	M	Y
51	06/15/27	M	10/1/1950	F	N
52	12/04/52	F	10/1/1950	M	N
53	03/20/39	F	10/1/1950	M	N
54	04/06/38	F	10/1/1950	M	N
55	10/14/37	F	10/1/1950	M	N
56	05/29/29	M	10/1/1950	F	N
57	08/18/28	M	10/04/35	F	Y
58	06/05/28	F	10/1/1950	M	N
59	01/21/45	F	10/1/1950	M	N
60	08/02/30	F	10/1/1950	M	N
61	08/14/50	M	10/1/1950	F	N
62	06/29/46	M	10/1/1950	F	N
63	08/22/47	F	10/1/1950	M	N

Macro Panola Retiree.xlsCensus Print

VOL. 62 PAGE 628

APPROVED
06-09-2008
David L. Anderson,
County Judge

PANOLA COUNTY OFFICIAL/EMPLOYEE
REQUEST FOR ATTENDANCE
AT A CONFERENCE

NAME: Sherry Jones

POSITION: Sgt

DEPARTMENT: Sheriff

DATE: 5/20/08

CONFERENCE: Jail Management & Leadership Symposium

LOCATION: Huntsville, Tx

DATES: 7/14 to 7/17

NUMBER OF DAYS OUT OF OFFICE FOR THIS CONFERENCE: 4

Does the conference meet your educational requirements for the year? No

If not, how much of your requirements will be met by this conference? 32 hrs

How much of your requirements have been met already, not counting this conference? None

How many days have you been away from your job this year for conferences, not counting this conference? None

Do you have sufficient funds in your budget for this conference? Yes

Write a short statement explaining the public purpose that will be met by your attendance at this conference: (continue on the back if necessary.)

Inservice Training

VOL. 62 PAGE 629

APPROVED
06-09-2008
David L. Anderson,
County Judge

PANOLA COUNTY OFFICIAL/EMPLOYEE REQUEST FOR ATTENDANCE AT A CONFERENCE

NAME: Albert Garza

POSITION: Sr. Detention Deputy

DEPARTMENT: Sheriff

DATE: 5/30/08

CONFERENCE: Jail Management & Leadership Symposium

LOCATION: Huntsville, Tx

DATES: 7/14 to 7/17

NUMBER OF DAYS OUT OF OFFICE FOR THIS CONFERENCE: 4

Does the conference meet your educational requirements for the year? No

If not, how much of your requirements will be met by this conference? 32 hrs

How much of your requirements have been met already, not counting this conference? 40 hrs

How many days have you been away from your job this year for conferences, not counting this conference? 5

Do you have sufficient funds in your budget for this conference? Yes

Write a short statement explaining the public purpose that will be met by your attendance at this conference: (continue on the back if necessary.)

Inservice Training

VOL. 62 PAGE 630

APPROVED
06-09-2008

David L. Anderson,
County Judge

PANOLA COUNTY OFFICIAL/EMPLOYEE REQUEST FOR ATTENDANCE AT A CONFERENCE

NAME: Melissa Poindexter

POSITION: Dispatch

DEPARTMENT: Sheriff

DATE: 5/20/08

CONFERENCE: TDD Training

LOCATION: Tyler, Tx

DATES: April 23 to April 23

NUMBER OF DAYS OUT OF OFFICE FOR THIS CONFERENCE: 1

Does the conference meet your educational requirements for the year? No

If not, how much of your requirements will be met by this conference? 4 hrs

How much of your requirements have been met already, not counting this conference? None

How many days have you been away from your job this year for conferences, not counting this conference? None

Do you have sufficient funds in your budget for this conference? Yes

Write a short statement explaining the public purpose that will be met by your attendance at this conference: (continue on the back if necessary.)

Required 911 Training

VOL. 62 PAGE 631

APPROVED
06-09-2008
David L. Anderson,
County Judge

PANOLA COUNTY OFFICIAL/EMPLOYEE REQUEST FOR ATTENDANCE AT A CONFERENCE

NAME: Sarah Colley Jones

POSITION: County Extension Agent-FCS

DEPARTMENT: Extension Office

DATE: June 3, 2008

CONFERENCE: TEAFCS State Conference

LOCATION: Amarillo, Texas

DATES: July 28, 2008 to July 31, 2008

NUMBER OF DAYS OUT OF OFFICE FOR THIS CONFERENCE: 4

Does the conference meet your educational requirements for the year? _____

If not how much of your requirements will be met by this conference? _____

How much of your requirements have been met already, not counting this conference?

_____

How many days have you been away from your job this year for conferences, not counting this conference? 0

Do you have sufficient funds in your budget for this conference? Yes

Write a short statement explaining the public purpose that will be met by your attendance at this conference: (continue on the back if necessary.)

I will be meeting with other Family Consumer Sciences professionals for the purpose of sharing ideas and educating one another with regard to AgriLife Extension programs. Also, I will be increasing knowledge in areas of expertise such as clothing and textiles, nutrition, cooking techniques, and IT.

VOL. 62 PAGE 632

PANOLA COUNTY OFFICIAL/EMPLOYEE REQUEST FOR ATTENDANCE AT A CONFERENCE

APPROVED
06-09-2008
David L. Anderson,
County Judge

NAME: Shelby Blackburn

POSITION: LHC assistant

DEPARTMENT:

DATE: June 2, 2008

CONFERENCE: 1115 Workshop

LOCATION: Weatherford, Tx

DATES: July 21 to July 22

NUMBER OF DAYS OUT OF OFFICE FOR THIS CONFERENCE: 2

Does the conference meet your educational requirements for the year? _____

If not, how much of your requirements will be met by this conference? _____

How much of your requirements have been met already, not counting this conference?

_____

How many days have you been away from your job this year for conferences, not counting this conference? _____

Do you have sufficient funds in your budget for this conference? _____

Write a short statement explaining the public purpose that will be met by your attendance at this conference: (continue on the back if necessary.)

_____

VOL. 62 PAGE 633

ACTION ITEMS

Panola County
09 Jun 2008
THE SOFTWARE GROUP, INC.

ACCOUNTS PAYABLE SYSTEM

Open Invoices thru 06/09/08

08:46:56am

	Gross Amount.	Req.	Req.	Discount	Req.	Req.	Net Amt.....
* Due 177-A T & T	$589.00			$0.00			$ 589.00
* Due 3841-A T & T (BASE RATES)	$253.50			$0.00			$ 253.50
* Due 605-ABC AUTO PARTS	$11.99			$0.00			$ 11.99
* Due 4361-ACA COMMUNICATIONS & PUBL	$72.00			$0.00			$ 72.00
* Due 4083-ACE HARDWARE	$175.92			$0.00			$ 175.92
* Due 4084-ACE HARDWARE	$180.93			$0.00			$ 180.93
* Due 3308-ADAM JONES	$1050.00			$0.00			$ 1050.00
* Due 4104-ADOLESCENT POWER PROGRAM	$45.00			$0.00			$ 45.00
* Due 4153-ADVANCED PEST TECHNOLOGY	$190.00			$0.00			$ 190.00
* Due 2615-ALAN SMITH	$1050.00			$0.00			$ 1050.00
* Due 3908-ALLTEL - CDA	$509.32			$0.00			$ 509.32
* Due 4133-ALLTEL - CT.HSE SEC.	$118.93			$0.00			$ 118.93
* Due 3464-AMERICAN ELECTRIC POWER	$183.95			$0.00			$ 183.95

	Gross Amount.	Req.	Req.	Discount	Req.	Req.	Net Amt.....
* Due 229-ANDERSON TRACTOR SALES	$2743.90			$0.00			$ 2743.90
* Due 2498-AVFUEL CORP	$20694.54			$0.00			$ 20694.54
* Due 1635-BASKIN'S MARSHALL	$84.85			$0.00			$ 84.85
* Due 4398-BECKVILLE HARDWARE	$26.17			$0.00			$ 26.17
* Due 738-BRAC'S STEAKHOUSE	$153.41			$0.00			$ 153.41
* Due 4144-BURNS & GILL ARCHITECTS	$9621.34			$0.00			$ 9621.34
* Due 4005-BUSINESS CARD/PLATINUM P	$676.88			$0.00			$ 676.88
* Due 4015-BUSINESS CARD/PLATINUM PL	$47.00			$0.00			$ 47.00
* Due 6-CAIN HARDWARE AND LUMBER CO	$732.46			$0.00			$ 732.46
* Due 731-CARTHAGE AWARDS	$7.00			$0.00			$ 7.00
* Due 337-CARTHAGE INDEPENDENT SCHO	$124.00	C		$0.00			$ 124.00
* Due 228-CARTHAGE MUFFLER SHOP & T	$430.10	R		$0.00			$ 430.10
* Due 95-CARTHAGE OFFICE SUPPLY, I	$4325.36			$0.00			$ 4325.36

	Gross Amount.	Req.	Req.	Discount	Req.	Req.	Net Amt.....
* Due 3434-CARTHAGE TRACTOR & EQUIPM	$36.51			$0.00			$ 36.51
* Due 158-CASSITY JONES HARDWARE	$589.83			$0.00			$ 589.83
* Due 4200-CECELIA BATES	$30.00			$0.00			$ 30.00
* Due 120-CHEVRON USA, INC.	$323.54			$0.00			$ 323.54
* Due 3912-CHEYENNE LANPLEY	$70.46			$0.00			$ 70.46
* Due 37-CITY OF CARTHAGE	$26470.85			$0.00			$ 26470.85
* Due 1139-CITY OF CARTHAGE WATER	$2128.20	P	E	$0.00			$ 2128.20
* Due 256-CONLEY LOTT NICHOLS	$136.40			$0.00			$ 136.40
* Due 4547-CONSUMER REPORTS	$26.00			$0.00			$ 26.00
* Due 195-COREY BANKHEAD	$700.00			$0.00			$ 700.00
* Due 3562-CPU WHOLESALE COMPUTER P	$240.00			$0.00			$ 240.00
* Due 28-CRAIG MILAM ELECTRIC	$589.48			$0.00			$ 589.48
* Due 2606-CUSTOM PRODUCTS CORPORAT	$434.95			$0.00			$ 434.95
* Due 43-D & C CLEANING CONTRACTOR	$4798.00			$0.00			$ 4798.00

	Gross Amount.	Req. Req.	Discount	Req. Req.	Net Amt.....
* Due 452-DALLAS COUNTY TREASURER	$7800.00		$0.00		$ 7800.00
* Due 4206-DARLENE BEETS	$90.00		$0.00		$ 90.00
* Due 775-DAVID BROOKS	$100.00		$0.00		$ 100.00
* Due 3240-DEBBIE'S BEST WATER STOR	$116.00		$0.00		$ 116.00
* Due 1423-DEBRA JOHNSON	$20.00		$0.00		$ 20.00
* Due 1906-DECISIONONE CORPORATION	$18.72		$0.00		$ 18.72
* Due 1470-DELL MARKETING L.P.	$2833.54		$0.00		$ 2833.54
* Due 3536-DIGICOMM COMMUNICATIONS I	$16.95		$0.00		$ 16.95
* Due 4475-DOGGETT MACHINERY SERVIC	$636.87		$0.00		$ 636.87
* Due 4465-DOROTHY MCCLELLAND	$60.00		$0.00		$ 60.00
* Due 4543-DOUG SMITH	$2887.50		$0.00		$ 2887.50
* Due 3910-ECONO SIGNS	$972.74		$0.00		$ 972.74
* Due 2964-ELLIOTT ELECTRIC SUPPLY	$119.63		$0.00		$ 119.63

	Gross Amount.	Req.	Req.	Discount	Req.	Req.	Net Amt.....
* Due 3388-ETMC-CARTHAGE INDIGENT	$6214.23			$0.00			$ 6214.23
* Due 3026-ETOX	$571.35			$0.00			$ 571.35
* Due 4349-ETTL ENGINEER & CONSULT	$1192.50			$0.00			$ 1192.50
* Due 93-EXCEL FORD LINCOLN MERCURY	$8.88			$0.00			$ 8.88
* Due 127-EXXONMOBIL	$474.52			$0.00			$ 474.52
* Due 14-FIRMIN'S OFFICE CITY	$749.95			$0.00			$ 749.95
* Due 2911-FISH & STILL EQUIPMENT CO	$37.86			$0.00			$ 37.86
* Due 3304-FOCUS ON YOUTH SEMINAR	$50.00			$0.00			$ 50.00
* Due 3899-FRESH COUNTRY FOOD SERV	$1023.14			$0.00			$ 1023.14
* Due 53-FUTURE EQUIPMENT CO INC	$643.68			$0.00			$ 643.68
* Due 320-GALL'S INC	$123.95			$0.00			$ 123.95
* Due 1507-GRAY'S WHOLESALE TIRE D	$4629.55			$0.00			$ 4629.55
* Due 546-HAWTHORN FUNERAL HOME	$535.00			$0.00			$ 535.00

	Gross Amount.	Req.	Req.	Discount	Req.	Req.	Net Amt.....
* Due 3255-HOLT CAT	$8435.03			$0.00			$ 8435.03
* Due 3740-INTERSTATE BRANDS CORP.	$304.47			$0.00			$ 304.47
* Due 3349-J. E. KINGHAM CONSTRU	$464505.87			$0.00			$ 464505.87
* Due 4312-JAMES M. CALLOWAY	$140.00			$0.00			$ 140.00
* Due 4554-JOHN LEARY	$872.00			$0.00			$ 872.00
* Due 4553-JOSEPH & TINA BARNHOUSE	$20.00			$0.00			$ 20.00
* Due 2164-JPCA OF TEXAS INC	$140.00			$0.00			$ 140.00
* Due 4487-JUST IN TIME SANITATION	$140.00			$0.00			$ 140.00
* Due 4254-JUST WHISTLE	$75.00			$0.00			$ 75.00
* Due 4029-KATIE NIELSEN	$350.00			$0.00			$ 350.00
* Due 4555-KENNETH LEARY	$180.00			$0.00			$ 180.00
* Due 181-LAGRONE AIR CONDITIONING &	$70.00	C		$0.00			$ 70.00
* Due 188-LEGAL DIRECTORIES	$76.50			$0.00			$ 76.50
* Due 451-LORA J. TAYLOR	$450.00			$0.00			$ 450.00

	Gross Amount.	Req.	Req.	Discount	Req.	Req.	Net Amt.....
* Due 583-LOWE TRACTOR & EQUIPMENT IN	$6.34			$0.00			$ 6.34
* Due 4393-LYNDRA & TONY CARTWRIGHT	$30.00			$0.00			$ 30.00
* Due 1240-M.G. CLEANERS	$186.50			$0.00			$ 186.50
* Due 4519-MELISSA WILLIAMS	$45.00			$0.00			$ 45.00
* Due 4201-MICHAEL & GINNY HOWARD	$20.00			$0.00			$ 20.00
* Due 425-MORRIS SANFORD JR.	$4600.00			$0.00			$ 4600.00
* Due 3030-O'REILLY AUTO PARTS	$327.25			$0.00			$ 327.25
* Due 3316-PAMELA WORTHINGTON	$1000.00			$0.00			$ 1000.00
* Due 3193-PANOLA COUNTY CHILD PR	$28000.00	R		$0.00			$ 28000.00
* Due 1622-PANOLA COUNTY JURY FUND	$5000.00			$0.00			$ 5000.00
* Due 4453-PANOLA COUNTY RETIREE	$89950.96			$0.00			$ 89950.96
* Due 771-PANOLA COUNTY ROAD & BRID	$400.00			$0.00			$ 400.00
* Due 4464-PAULA PARKER	$40.00			$0.00			$ 40.00

	Gross Amount.	Req.	Req.	Discount	Req.	Req.	Net Amt.....
* Due 103-PEGUES-HURST MOTOR CO.	$1242.15			$0.00			$ 1242.15
* Due 4481-PETROLEUM TRADERS CORP	$29817.65			$0.00			$ 29817.65
* Due 243-PIPPEN MOTOR COMPANY	$558.01			$0.00			$ 558.01
* Due 4461-PRECIOUS CHILDRENS ENERGE	$45.00			$0.00			$ 45.00
* Due 2839-RANDALL DODGE-CHRYSLER-J	$130.59			$0.00			$ 130.59
* Due 4551-RANDY WHATLEY	$600.00			$0.00			$ 600.00
* Due 4337-RAYMOND & JOYCE YBARRA	$30.00			$0.00			$ 30.00
* Due 525-RICK MCPHERSON	$7750.00			$0.00			$ 7750.00
* Due 3807-SAFECO INSURANCE COMPANI	$100.00			$0.00			$ 100.00
* Due 4556-SARAH JONES	$36.43			$0.00			$ 36.43
* Due 198-SHENANDOAH INSURANCE CORP	$181.15			$0.00			$ 181.15
* Due 4194-SUDDENLINK	$19.95			$0.00			$ 19.95
* Due 29-TED'S SAW SHOP	$207.02			$0.00			$ 207.02

	Gross Amount.	Req.	Req.	Discount	Req.	Req.	Net Amt.....
* Due 238-TELETOUCH CORPORATION	$383.86			$0.00			$ 383.86
* Due 3622-TEXAS JUSTICE COURT JUD8	$120.00	A		$0.00			$ 120.00
* Due 3009-TEXAS PARKS & WILDLIFE 6	$149.60			$0.00			$ 149.60
* Due 2500-TEXAS WILDLIFE DAMAGE M	$2200.00			$0.00			$ 2200.00
* Due 4454-THE BURK FOUNDATION	$30.00			$0.00			$ 30.00
* Due 1-TOLEDO AUTOMOTIVE	$3452.79			$0.00			$ 3452.79
* Due 668-TOM M. JONES, DDS	$185.00			$0.00			$ 185.00
* Due 2642-TONI HUGHES	$198.00			$0.00			$ 198.00
* Due 1990-TRI-STATE FASTENERS & SU	$169.94			$0.00			$ 169.94
* Due 4549-TUFTS UNIV. HEALTH & NUTR	$28.00			$0.00			$ 28.00
* Due 2874-TX. ASSOC. OF COUNTIES	$39788.37	I		$0.00			$ 39788.37
* Due 4152-TXI OPERATIONS LP	$572.00			$0.00			$ 572.00
* Due 4365-TYLER CARE SHELTER	$30.00			$0.00			$ 30.00
* Due 1896-UNIFIRST	$804.96			$0.00			$ 804.96

	Gross Amount.	Req.	Req.	Discount	Req.	Req.	Net Amt.....
* Due 2849-VIANNA CHESHIRE	$324.07			$0.00			$ 324.07
* Due 2971-WALMART COMMUNITY SO	$720.15			$0.00			$ 720.15
* Due 2533-WEST GROUP	$77.00			$0.00			$ 77.00
* Due 149-WHOLESALE SUPPLY INC	$175.00			$0.00			$ 175.00
* Due 64-XEROX CORPORATION	$557.24			$0.00			$ 557.24
Totals	$808647.18			$0.00			$ 808647.18

330 records listed.

VOL. 62 PAGE 644

314 W. WELLINGTON
CARTHAGE, TX 75633
(903) 693-0333
FAX (903) 693-9366

JACK ELLETT
SHERIFF

PANOLA COUNTY SHERIFF'S DEPARTMENT

June 3, 2008

Panola County Commissioner's Court

I request that the Real Property at 306 Hudson St. Carthage, Texas, be declared surplus. This property was awarded to Panola County as result of a seizure; reference Cause 2003-A-001, Agreed Order of Forfeiture.
Property to be sold in accordance with provisions of Chapter 481 of the Texas Health and Safety Code and Chapter 59 of the Texas Code of Criminal Procedure and pursuant to local agreement.

Copy of Order and Legal Description attached.

Jack Ellett
Sheriff

HONESTY - INTEGRITY - DEDICATION

A TRUE COPY
of the original hereof, I certify
Sandra King
DISTRICT COURT CLERK
PANOLA COUNTY, TEXAS
By _____
DEPUTY CLERK

10:35 A

CAUSE #2003-A-001

THE STATE OF TEXAS	§	123RD DISTRICT COURT
	§	
	§	
VS.	§	IN AND FOR
	§	
Building & Real Property at 306 Hudson Street, Carthage	§	PANOLA COUNTY, TEXAS

AGREED ORDER OF FORFEITURE

BE IT REMEMBERED that on the 19th day of April, 2004, came on to be heard the above entitled and numbered cause. Plaintiff, The State of Texas appeared by and through her Criminal District Attorney, DANNY BUCK DAVIDSON, and announced ready. The Respondents, JASON LEE ALLISON and MARSHA R. TAYLOR waived appearance, having reached an agreement with the State of Texas.

The parties have agreed to this order as evidenced by their signatures below. The parties further have agreed to submit all matters in controversy, of fact and of law to the Court sitting without a jury.

The respondents, having been given the opportunity to confer with an attorney have reached a settlement agreement with the State of Texas in this cause. The Respondents, JASON LEE ALLISON and MARSHA R. TAYLOR, consent to this judgement. The parties further agree to the following finding and orders as indicated by their respective signatures below:

(1) That on or about 01/02/2003, Peace Officers with Panola County, Texas seized from the persons of JASON LEE ALLISON and MARSHA R. TAYLOR the building and real property located at 306 Hudson Street in Carthage, Panola County, Texas as described in Exhibit 'A' attached hereto;

(2) That JASON LEE ALLISON and/or MARSHA R. TAYLOR are the owner(s) of the

seized property which is the subject of this suit; and without admitting any wrongdoing;

(3) That the building and real property located at 306 Hudson Street in Carthage, Panola County, Texas which is described more fully in Exhibit 'A' attached hereto; is contraband;

(4) That the building and real property located at 306 Hudson Street in Carthage, Panola County, Texas which is described more fully in Exhibit 'A' attached hereto; be and is hereby awarded to the CRIMINAL DISTRICT ATTORNEY OF PANOLA COUNTY, TEXAS as agent for the State.

IT IS THEREFORE ORDERED, ADJUDGED AND DECREED that the building and real property located at 306 Hudson Street in Carthage, Panola County, Texas which is described more fully in Exhibit 'A' attached hereto is hereby forfeited to the State of Texas by and through the office of the CRIMINAL DISTRICT ATTORNEY OF PANOLA COUNTY, TEXAS, as agent for the State, to be used in accordance with the provisions of Chapter 481 of the Texas Health and Safety Code and Chapter 59 of the Texas Code of Criminal Procedure and pursuant to local agreement.

Signed on this the 12 day of April, 2004.

JUDGE PRESIDING

CERTIFIED COPY

AGREED AND ACCEPTED:

Jason Lee Allison

JASON LEE ALLISON
Respondent

SWORN AND SUBSCRIBED BEFORE ME, this the 23 day of March, 2004.

S. C. Breazeale

Notary Public, State of Texas

STEVEN C. BREAZEALE
MY COMMISSION EXPIRES
January 8, 2006

AGREED AND ACCEPTED:

Marsha Taylor

MARSHA R. TAYLOR
Respondent

SWORN AND SUBSCRIBED BEFORE ME, this the 2 day of ~~March~~ April, 2004.

Marilu Stephens

Notary Public, State of Texas

Notary Public
State of Texas
My Commission Expires
July 12, 2007

AGREED AND ACCEPTED:

DAVID MOORE
Attorney

DANNY BUCK DAVIDSON
Criminal District Attorney

CERTIFIED COPY

EXHIBIT A

TRACT 2: All that certain parcel of land situated in Panola County, Texas, and being a part of the George Goodwin Headright Survey and also being a portion of a lot of land conveyed by Jimmie Reese to A.L. Turner on August 13, 1926, and more fully described as follows:

BEGINNING at the Southwest corner of said original lot, an iron pin for corner in East line of Hudson Street;

THENCE N 78 E 178 feet to the Southeast corner of said original lot an iron pin for corner;

THENCE N 9 With E B line of said original lot 95 feet to iron pin for corner;

THENCE S 78 W 178 feet to corner in East line of Hudson Street;

THENCE S 9 E with Hudson Street 95 feet to the place of beginning, and containing 16,910 square feet of land.

CERTIFIED COPY

TRACT 3: All that certain parcel of land situated in Panola County, Texas, a part of the George Goodwin Survey and being a part of that certain tract conveyed by Clarence B. Ellis to Gettis Black by deed dated May 9th, 1957, of record in Volume 404, page 636, Panola County Deed Records, and being more particularly described as follows:

BEGINNING at the NW corner of said lot above referred to, said point being on the east line of Hudson Street to the City of Carthage;

THENCE S 9 E with the east line of said street 90 feet to a point for corner;

THENCE N 78 E 100 feet to a point for corner;

THENCE N 9 W 90 feet for corner, this point being on the north line of said original lot conveyed by Clarence B. Ellis;

THENCE S 78 W 100 feet to point for beginning.

Said aforementioned property being the same as conveyed by Christopher Hardy and wife Clarinda J. Hardy to Marsha R. Taylor by deed dated July 3rd, 2002, recorded in Volume 1155, page 295 of the deed records of Panola County, Texas.

CERTIFIED COPY

VOL. 62 PAGE 650

tyler TECHNOLOGIES

Panola County Juvenile Probation Office

June 2, 2008

Purchase Agreement	Qty.	Units	Unit Price	Ext. Price
MPC ClientPro 385 minitower, Core 2 Duo E6320 1 86GHz, 1GB RAM, 80GB disk, USB keyboard, USB optical wheel mouse, 52x CD-ROM, Office 2007 Basic (Outlook, Word, Excel), Symantec Antivirus 90-day intro, Windows XP Pro, Gigabit Ethernet, 4yr MPC NBDOS service contract, 17" LCD display (no floppy drive, no modem, no serial port)	3	ea	1,475.00	4,425.00

Note Client will handle the installation.

Total (shipping charges not included):	$4,425.00

Tyler Technologies
Prepared by: John Galbraith
6500 International Parkway
Suite 2000
Plano, Texas 75093
(800) 966-6999 / (972) 713-3778 fax

To Authorize This Purchase Agreement

1) Review Items for Accuracy
2) Complete 'Bill To' and 'Ship To' Information
3) Note any Special Instructions (i e. expedite shipping, invoice asap, etc.)
4) Attach Your Purchase Order (if applicable, not required)
5) Sign and Fax to (972) 713-3778, Attn Jennifer Keltner

Prices valid for up to 30 days from date of issue.

Panola County Juvenile Probation Office

Bill To (please print) *PO Number*

David L. Anderson 6-9-08
Authorized Signature *Date*

Ship To Attention Of (please print) *Telephone*

Ship To Address

Special Shipping or Invoicing Instructions (if applicable)

Approved travel in a personal vehicle will be reimbursed at the rate determined by the Internal Revenue Service to and from the destination by the most direct route. State mileage figures may be used. When a Panola County employee is travelling in a non Panola County employee's vehicle, the Panola County employee will be allowed $.05 per mile to help defray the costs incurred by the driver.

9.05 *Air Travel*

Travel by air should be at the coach rate and used only when time constraints would preclude driving (this might include the necessity of an overnight stop if driving is used), or when all expenses associated with air travel is not more than 20% more than the total mileage reimbursement, room, and meal requirements necessitated by automobile travel. An employee may elect to use air travel and receive the limits prescribed by the county as partial reimbursement of the total fare. Employees are urged to use shuttle busses for transportation to and from airports and hotels.

A copy of ticket charges must accompany requests for reimbursements and prior approval by the County Judge must be obtained to use air travel by completing a "Justification for Air Travel" form available at the County Judge's office.

9.06 Meals, Lodging and Miscellaneous Expenses

Reimbursement will be at a maximum of $250.00 per day per employee. Receipts shall be attached as verification. Tips will be included on meal receipts. Reimbursements will not be made for alcoholic beverages. Reimbursements will include miscellaneous expenses such as taxi fare, valet service, etc. Receipts are not required, however, explanation must be given for these claimed expenses.

9.07 Advances

Advances should be requested as a last resort and may be approved for up to $150.00 per day. Request for advances should be made on a "Request for Travel Advance" form, available at the County Judge's office, and must be signed by the department head and the County Judge. An employee who is advanced travel money will complete the "Travel Reimbursement" form with the required receipts within 5 days after return to the County. An advance greater than the actual cost must be returned to the County within 5 days after return to the County. Any otherwise allowable expense for which receipts are not submitted will not be approved.

PANOLA COUNTY, TEXAS

INVITATION TO BID

RETURN BID TO:

COUNTY JUDGE
PANOLA COUNTY COURTHOUSE, ROOM 216A
CARTHAGE, TEXAS 75633

The enclosed INVITATION TO BID (ITB) and accompanying SPECIFICATIONS AND BID SHEET are for your convenience in bidding the enclosed referenced service/products for Panola County.

Sealed bids shall be received no later than:

9:00AM., MONDAY, JUNE 9, 2008

MARK ENVELOPE

"BID, ONE 3/4 TON TRUCK"

Bidder shall sign and date the bid. Bids which are not signed and dated can be rejected. Bids must be submitted on the enclosed bid sheets and must be in ink or typewritten.

Panola County appreciates your time and effort in preparing this bid. Please note that all bids must be received at the designated location by the deadline shown. Bids received after the deadline will not be considered for the award of the contract, and shall be considered void and unacceptable. Opening is scheduled to be held in Commissioners Courtroom, Panola County Courthouse, Carthage, Texas. You are invited to attend.

Any questions concerning this invitation to Bid and specifications should be directed to John DePresca, Superintendent, at (903) 693-3763.

SIGNATURE OF BIDDER

INSTRUCTIONS/TERMS OF CONTRACT

By order of the Commissioners Court of Panola County, Texas, sealed bids will be received for:

BID, ONE 3/4 TON TRUCK"

IT IS UNDERSTOOD that the Commissioners Court of Panola County, Texas reserves the right to reject any or all bids for any or all products and/or services covered in this bid request and to waive informalities or defects in bids or to accept such bids as it shall deem to be in the best interests of Panola County.

BIDS MUST BE submitted on the bid forms included for that purpose in this packet. Bids shall be placed in separate sealed envelopes, with **each page manually signed by a person having the authority to bind the firm in a contract** and marked clearly on the outside as shown below.

SUBMISSION OF BIDS: Sealed bids shall be submitted to:

COUNTY JUDGE
PANOLA COUNTY COURTHOUSE, ROOM 216A
CARTHAGE, TEXAS 75633

Not later **than 9:00 A.M., Monday, June 9,2008**

MARK ENVELOPES:

"BID, ONE 3/4 TON TRUCK"

ALL BIDS MUST BE RECEIVED IN THE COUNTY JUDGE'S OFFICE BEFORE OPENING DATE AND TIME

SIGNATURE OF BIDDER

INVITATION TO BID
INSTRUCTIONS / TERMS OF CONTRACT

FUNDING: Funds for payment have been provided through the Panola County Budget adopted by the Commissioners Court for **Fiscal Year 2008.**

LATE BIDS: Bids received in the County Judge's Office after submission deadline will be considered void and unacceptable. Panola County is not responsible for lateness or non-delivery of mail, carrier, etc.

ALTERING BIDS: Bids cannot be altered or amended after submission deadline. Any interlineation, alteration or erasure made before opening time must be initialed by the signer of the bid, guaranteeing authenticity.

WITHDRAWAL OF BID: A bid may not be withdrawn or canceled by the bidder without the permission of the county for a period of ninety (90) days following the date designated for the receipt of bids, and bidder so agrees upon submittal of their bid.

SALES TAX: Panola County is exempt by law from payment of Texas Sales Tax and Federal Excise Tax, therefore, the bid shall not include sales taxes.

BID AWARD: Panola County reserves the right to award bids on the lump sum or unit price basis, whichever is in the best interest of the county.

CONTRACT: This bid, when properly accepted by Panola County, shall constitute a contract equally binding between the successful bidder and Panola County. No different or additional terms will become a part of this contract with the exception of Change Orders.

CHANGE ORDERS: No oral statement of any person shall modify or otherwise change, or affect the terms, conditions or specifications stated in the resulting contract. All change orders to the contract will be made in writing by the Panola County Judge.

IF DURING THE life of the contract, the successful bidder's net prices to other customers for items awarded herein are reduced below the contracted price, it is understood and agreed that the benefits of such reduction shall be extended to Panola County.

DELIVERY: All delivery fees and freight or handling charges shall be as stated on the bid and contract forms section and if not so stated no such costs, fee or charge will be paid.

CONFLICT OF INTEREST: No public official shall have interest in this contract, in accordance with Vernon's Texas Codes Annotated, Local Government Code Title 5, Subtitle C, Chapter 171.

ETHICS: The bidder shall not offer or accept gifts or anything of value nor enter into any business arrangement with any employee, official or agent of Panola County.

SIGNATURE OF BIDDER

EXCEPTIONS / SUBSTITUTIONS: All bids meeting the intent of this invitation to bid will be considered for award. Bidders taking exception to the specifications, or offering substitutions, shall state these exceptions in the section provided or by attachment as part of the bid. The absence of such a list shall indicate that the bidder has not taken exceptions and shall hold the bidder responsible to perform in strict accordance with the specifications of the invitation. Panola County Commissioners Court reserves the right to accept any and all or none of the exceptions(s) / substitution(s) deemed to be in the best interest of the county.

DESCRIPTIONS: Any reference to model and/or make/manufacturer used in bid specifications is descriptive, not restrictive. It is used to indicate the type and quality desired. Bids on items of like quality will be considered.

ADDENDA: Any interpretations, corrections or changes in this "Invitation To Bid and Specifications" will be made by addenda. Sole issuing authority of addenda shall be vested in Panola. Addenda will be mailed to all who are known to have received a copy of this Invitation To Bid. Bidders shall acknowledge receipt of all addenda.

BIDS MUST COMPLY with all federal, state, county and local laws concerning these types of service.

DESIGN, STRENGTH, QUALITY of materials must conform to the highest standards of manufacturing practice.

MINIMUM STANDARDS FOR RESPONSIBLE PROSPECTIVE BIDDERS: A prospective bidder must affirmatively demonstrate bidder's responsibility. A prospective bidder must meet the following requirements:

1. have adequate financial resources, or the ability to obtain such resources as required;
2. be able to comply with the required or proposed delivery schedule;
3. have a satisfactory record of performance;
4. have a satisfactory record of integrity and ethics;
5. be otherwise qualified and eligible to receive an award.

Panola County may request representation and other information sufficient to determine bidder's ability to meet these minimum standards listed above.

REFERENCES: Panola County may request bidder to supply a list of at lease three (3) references where like services/products have been supplied by their firm.

BIDDER SHALL PROVIDE with this bid response, all documentation required by this ITB. Failure to provide this information may result in rejection of bid.

SIGNATURE OF BIDDER

SUCCESSFUL BIDDER SHALL defend, indemnify and save harmless Panola County and all its officers, agents and employees from all suits, actions, or other claims of any character, name and description brought for or on account of any injuries or damages received or sustained by any person, persons or property on account of any negligent act or fault of the successful bidder, or of any agent, employee, subcontractor or supplier in the execution of, or performance under, any contract which ;may result from bid award. Successful bidder indemnifies and will indemnify and save harmless Panola County from liability, claim or demand on their part, agents, servants, customers, and/or employees whether such liability, claim or demand arise from event or casualty happening or within the occupied premises themselves or happening upon or in any of the halls, elevators, entrances, stairways or approaches of or to the facilities within which the occupied premises are located. Successful bidder shall pay any judgment with costs which may be obtained against Panola County growing out of such injury or damages.

WAGES: Successful bidder shall pay or cause to be paid, without cost or expense to Panola County, all Social Security, Unemployment and Federal Income Withholding Taxes of all such employees and all such employees shall be paid wages and benefits as required by Federal and/or State Law.

TERMINATION OF CONTRACT: This contract shall remain in effect until contract expires, delivery and acceptance of products and/or performance of services ordered or terminated by either party with a thirty (30) days written notice prior to any cancellation. The successful bidder must state therein the reasons for such cancellation. Panola County reserves the right to award canceled contract to next lowest and best bidder as it deems to be in the best interest of the county.

TERMINATION FOR DEFAULT: Panola County reserves the right to enforce the performance of this contract in any manner prescribed by law or deemed to be in the best interest of the county in the event of breach or default of this contract. Panola County reserves the right to terminate the contract immediately in the event the successful bidder fails to:

1. meet schedules;
2. defaults in the payment of any fees; or
3. otherwise perform in accordance with these specifications.

Breach of contract or default authorizes the county to exercise any of all of the following rights:

1. Panola County may take possession of the assigned premises and any fees accrued or becoming due to date;

2. Panola County may take possession of all goods, fixtures and materials of successful bidder therein and may foreclose its lien against such personal property, applying the proceeds toward fees due or thereinafter becoming due.

SIGNATURE OF BIDDER

In the event the successful bidder shall fail to perform, keep or observe any of the terms and conditions to be performed, kept or observed, Panola County shall give the successful bidder written notice of such default; and in the event said default is not remedied to the satisfaction and approval of the county within two (2) working days of receipt of such notice by the successful bidder, default will be declared and all the successful bidder's rights shall terminate.

Bidder, in submitting this bid, agrees that Panola County shall not be liable to prosecution for damages in the event that the county declares the bidder in default.

NOTICE: Any notice provided by this bid (or required by Law) to be given to the successful bidder by Panola County shall be conclusively deemed to have been given and received on the next day after such written notice has been deposited in the mail in Carthage, Texas, by Registered or Certified Mail with sufficient postage affixed thereto, addressed to the successful bidder at the address so provided; provided this shall not prevent the giving of actual notice in any other manner.

PATENTS / COPYRIGHTS: The successful bidder agrees to protect Panola County from claims involving infringement of patents and/or copyrights.

CONTRACT ADMINISTRATOR: Under this contract, Panola County may appoint a contract administrator with designated responsibility to ensure compliance with contract requirements. The contract administrator will serve as liaison between Panola County and the successful bidder.

PURCHASE ORDER: A purchase order(s) shall be generated by Panola County to the successful bidder. The purchase order number must appear on all itemized invoices and packing slips. Panola County will no be held responsible for any orders placed/delivered without a valid current purchase order number.

INVOICES shall show (a) name and address of successful bidder, (b) Panola County Purchase Order number, and (c) descriptive information as to the item(s) delivered.

PAYMENT will be made upon receipt and acceptance by the county of item(s) ordered and receipt of a valid invoice, in accordance with the State of Texas Prompt Payment Act, Article 601f V.T.C.S. Successful bidder is required to pay subcontractors within ten (10) days.

ITEMS supplied under this contract shall be subject to Panola County's approval. Items found defective or not meeting specifications shall be picked up and replaced by the successful bidder at no expense to the County. If item is not picked up within one (1) week after notification, the item will become a donation to the County for disposition.

SAMPLES: When requested, samples shall be furnished free of expense to Panola County.

SIGNATURE OF BIDDER

WARRANTY: Successful bidder shall warrant that all items/services shall conform to the proposed specifications and/or all warranties as stated in the Uniform Commercial Code and be free from all defects in material, workmanship and title.

REMEDIES: The successful bidder and Panola County agree that both parties have all rights, duties, and remedies available as stated in the Uniform Commercial Code.

VENUE: This agreement will be governed and construed according to the laws of the State of Texas. This agreement is performable in Panola County, Texas.

ASSIGNMENT: The successful bidder shall not sell, assign, transfer or convey this contract, in whole or in part, without the prior written consent of Panola County.

SILENCE OF SPECIFICATION: The apparent silence of these specifications as to any detail or to the apparent omission from it of a detailed description concerning any point, shall be regarded as meaning that only the best commercial practices are to prevail. All interpretations of these specifications shall be made on the basis of this statement.

Each insurance policy to be furnished by successful bidder shall include, by endorsement to the policy, a statement that a notice shall be given to Panola County by certified mail thirty (30) days prior to cancellation or upon any material change in coverage.

ANY QUESTIONS concerning this INVITATION TO BID AND SPECIFICATIONS should be directed to **John DePresca, Coordinator at (903) 693-3763.**

SIGNATURE OF BIDDER

BID, ONE 3/4 TON TRUCK

PANOLA COUNTY IS CURRENTLY ACCEPTING BIDS FOR ONE (1)3/4 TON TRUCK FOR USE BY THE ROAD & BRIDGE DEPARTMENT. THE TRUCK SHOULD MEET THE FOLLOWING SPECIFICATIONS:

1. Truck shall be at least a 2008 model with regular cab with 8' box..
2. Engine: No less than 6.7 liters, turbo diesel.
3. Transmission: No less than six (6) speed automatic.
4. Wheelbase: No less than 140 inches.
5. Misc: Power steering, power brakes, AM/FM radio, air conditioning, split bench seat, spare tire, maximum ground clearance height on factory tires to facilitate road construction, anti-spin rear axle, trailer tow package.
6. Warranty: No less than 3 years/36,000 miles.
7. Delivery: Truck shall be ready for pick up within 100 mile radius of Panola County Warehouse no later than July 31, 2008

QUESTIONS CONCERNING THIS BID SHOULD BE DIRECTED TO JOHN DEPRESCA, COORDINATOR AT 903-693-3763.

BID FORM AND CONTRACT

BID, ONE 3/4 TON TRUCK

TO THE COMMISSIONERS COURT OF PANOLA COUNTY, TEXAS FOR FURNISHING AND DELIVERING TO PANOLA COUNTY, TEXAS FOR USE BY THE ROAD & BRIDGE DEPARTMENT, IN ACCORDANCE WITH THE FOREGOING SPECIFICATIONS:

The undersigned, as bidder, declares that the only person or persons interested in this bid as principals are those named herein; that this bid is made without collusion with any other person, firm or corporation; and that I (we) have carefully examined the advertisement, instructions to bidders, specifications, and condition of payment. It is understood that the Court reserves the right to accept or reject and and/or all bids.

TOTAL PRICE $ 33,444

Exceptions to specifications:

1. TAX title & License not included
2.
3.
4.
5.
6.
7.
8.

SIGNATURE

COMPANY NAME: Randall Dodge Chrysler JEEP

ADDRESS: 100 Kilgore Dr.

CITY STATE ZIP: Henderson, Tx 75654

TELEPHONE NUMBER: 903 657 9513

DATE: 6/4/08

ACCEPTED:

COUNTY JUDGE

DATE: 6-9-08

RECORDED _____ O'CLOCK _____ M ON THE _____ DAY OF _____ 2008

MICKEY DORMAN, COUNTY CLERK, P.C.T.